COMPLEX SOLUTIONS MADE SIMPLE.

DEEP SEA ELECTRONICS PLC

DSE5210
AUTOSTART CONTROL MODULE

OPERATING MANUAL

Deep Sea Electronics Plc
Highfield House
Hunmanby
North Yorkshire
YO14 0PH
ENGLAND

Sales Tel: +44 (0) 1723 890099
Sales Fax: +44 (0) 1723 893303

E-mail: sales@Deepseaplc.com
Website: www.deepseaplc.com

DSE Model 5210 Control and Instrumentation System Operators Manual

© Deep Sea Electronics Plc
All rights reserved. No part of this publication may be reproduced in any material form (including photocopying or storing in any medium by electronic means or other) without the written permission of the copyright holder except in accordance with the provisions of the Copyright, Designs and Patents Act 1988.
Applications for the copyright holder's written permission to reproduce any part of this publication should be addressed to Deep Sea Electronics Plc at the address above.

Any reference to trademarked product names used within this publication is owned by their respective companies.

Deep Sea Electronics Plc reserves the right to change the contents of this document without prior notice.

TABLE OF CONTENTS

Section **Page**

1 INTRODUCTION 5

2 CLARIFICATION OF NOTATION USED WITHIN THIS PUBLICATION. 5

3 OPERATION 6
3.1 AUTOMATIC MODE OF OPERATION 6
3.2 MANUAL OPERATION 8

4 PROTECTIONS 9
4.1 WARNINGS 10
4.2 ANALOGUE PRE-ALARMS 10
4.3 HIGH CURRENT WARNING ALARM 11
4.4 SHUTDOWNS 12
4.5 HIGH CURRENT SHUTDOWN ALARM 14
4.6 ELECTRICAL TRIPS 14

5 **LCD INDICATORS AND LOGO INSERT 15**

6 DESCRIPTION OF CONTROLS 16
6.1 TYPICAL LCD DISPLAY SCREENS 17
6.2 LCD DISPLAY AREAS 18
6.3 VIEWING THE INSTRUMENTS 19
6.4 VIEWING THE EVENT LOG 20
6.5 INDICATORS 21
6.6 CONTROLS 21

7 FRONT PANEL CONFIGURATION 22
7.1 ACCESSING THE FRONT PANEL CONFIGURATION EDITOR 22
7.1.1 ENTERING THE CONFIGURATION EDITOR PIN NUMBER 22
7.2 EDITING AN ANALOGUE VALUE 23
7.2.1 EDITING THE CURRENT DATE/TIME 25

8 INSTALLATION INSTRUCTIONS 26
8.1 PANEL CUT-OUT 26
8.2 COOLING 26
8.3 UNIT DIMENSIONS 26
8.4 FRONT PANEL LAYOUT 27
8.5 REAR PANEL LAYOUT 27

9 ELECTRICAL CONNECTIONS 28
9.1 CONNECTION DETAILS 28
9.1.1 PLUG “A” 8 WAY 28
9.1.2 PLUG “B” 11 WAY 28
9.1.3 PLUG “D” 4 WAY (OPTIONAL) 29
9.1.4 PLUG “F” 4 WAY 29
9.1.5 PLUG “G” 5 WAY 29
9.1.6 PLUG “H” 4 WAY 29
9.1.7 PC CONFIGURATION INTERFACE CONNECTOR 29
9.1.8 EXPANSION OUTPUT CONNECTOR 29
9.2 CONNECTOR FUNCTION DETAILS 30
9.2.1 PLUG “A” 8 WAY 30
9.2.2 PLUG “B” 11 WAY 30
9.2.3 PLUG “D” 4 WAY (OPTIONAL, FITTED TO RS485 CONTROLERS ONLY) 31
9.2.4 PLUG “F” 4 WAY 31
9.2.5 PLUG “G” 5 WAY 31
9.2.6 PLUG “H” 4 WAY 31
9.2.7 PURCHASING ADDITIONAL CONNECTOR PLUGS FROM DSE 31

10 SPECIFICATION 32

11 COMMISSIONING 34

11.1.1 PRE-COMMISSIONING....34
12 FAULT FINDING....35
13 TYPICAL WIRING DIAGRAM....36
14 FACTORY DEFAULT CONFIGURATION....37
15 ICONS AND LCD IDENTIFICATION....40
15.1 PUSH BUTTONS....40
15.2 STATUS / MEASUREMENT UNITS....40
15.3 ALARM INDICATIONS....40
16 APPENDIX....41
16.1 ALTERNATIVE WIRING TOPOLOGIES....41
16.1.1 3 PHASE, 3 WIRE....41
16.1.2 1 PHASE, 2 WIRE....41
16.1.3 2 PHASE, 3 WIRE (2 PHASE CENTRE TAP NEUTRAL)....42
16.2 5210 IDMT TRIPPING CURVES (TYPICAL)....43
16.3 SENDER WIRING RECOMMENDATIONS....44
16.3.1 EARTH RETURN SENDERS....44
16.3.2 INSULATED RETURN SENDERS....44
16.3.3 FUEL LEVEL SENDERS....45
16.4 5200 SERIES CONFIGURATION SOFTWARE AND P810 INTERFACE MODULE....46
16.5 OUTPUT EXPANSION....46
16.5.1 RELAY OUTPUT EXPANSION (157)....46
16.5.2 LED OUTPUT EXPANSION (548)....46
16.6 INPUT EXPANSION....46
16.7 STANDBY GENERATING SET?....46
16.8 FULLY INTEGRATED AUTO MAINS FAILURE....46
16.9 ENCLOSURE CLASSIFICATIONS....47

1 INTRODUCTION

The **DSE 5210** autostart module has been designed to allow the OEM to meet most of the industry's complex specifications. It has been primarily designed to allow the user to start and stop the generator, and if required, transfer the load to the generator either manually (via external push-buttons) or automatically. The user also has facility to view all the system operating parameters via the LCD display.

The **DSE 5210** module monitors the engine, indicating the operational status and fault conditions; automatically shutting down the engine and giving a true first up fault condition of an engine failure by a flashing COMMON ALARM LED. Exact failure mode information is indicated by the LCD display on the front panel.

The powerful Microprocessor contained within the module allows for a range of complex features to be incorporated as standard;

- *Graphical Icon based LCD display (excluding the need for translations and languages).*
- *Voltage, Current and Power monitoring.*
- *Engine parameter monitoring.*
- *Fully configurable inputs for use as alarms or a range of different functions.*
- *Extensive range output functions using built in relay outputs or relay expansion available.*

Selective operational sequences, timers and alarm trips can be altered by the customer via a PC using the 5200 series configuration software and P810 interface.

Access to critical operational sequences and timers for use by qualified engineers, are barred by a security code.

The module is housed in a robust plastic case for front panel mounting. Connections to the module are via locking plug and sockets.

2 CLARIFICATION OF NOTATION USED WITHIN THIS PUBLICATION.

NOTE:	**Highlights an essential element of a procedure to ensure correctness.**
CAUTION!	**Indicates a procedure or practice which, if not strictly observed, could result in damage or destruction of equipment.**
WARNING!	**Indicates a procedure or practice, which could result in injury to personnel or loss of life if not followed correctly.**
©	**Deep Sea Electronics Plc owns the copyright to this manual, which cannot be copied, reproduced or disclosed to a third party without prior written permission.**
CE	**Compliant with BS EN 60950 Low Voltage Directive** **Compliant with BS EN 50081-2 EMC Directive** **Compliant with BS EN 50082-2 EMC Directive**
	Year 2000 Compliant

3 OPERATION

The following description details the sequences followed by a module containing the standard '*factory configuration*'. Always refer to your configuration source for the exact sequences and timers observed by any particular module in the field.

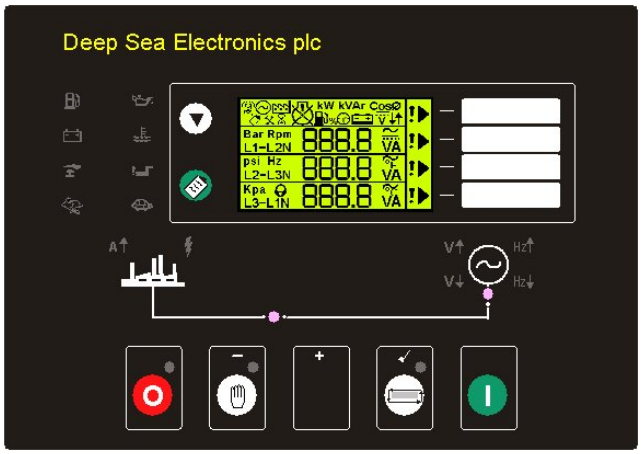

3.1 AUTOMATIC MODE OF OPERATION

NOTE:- If a digital input configured to panel lock is active, the LCD will display the icon. When in panel lock, changing module modes will not be possible. Viewing the instruments and event logs is NOT affected by panel lock.

This mode is activated by pressing the AUTO pushbutton. An LED indicator beside the button confirms this action.

When a **Remote Start** signal is applied to the remote start input, the following sequence is initiated:-

The **Remote Start Active** indicator illuminates (if configured).

To allow for false signals the Start Delay timer is initiated. After this delay, if the pre-heat output option is selected then the pre-heat timer is initiated, and the corresponding auxiliary output (if configured) will energise.

NOTE:- If the Remote Start signal is removed during the Start Delay timer, the unit will return to a stand-by state.

After the above delays, the **Fuel Solenoid** is energised, and then one second later, the **Starter Motor** is engaged.

The engine is cranked for a pre-set time period. If the engine fails to fire during this cranking attempt then the starter motor is disengaged for the pre-set rest period. Should this sequence continue beyond the set number of attempts, the start sequence will be terminated and

Fail to Start fault will be displayed accompanied by a flashing shutdown symbol.

When the engine fires, the starter motor is disengaged and locked out at a pre-set frequency from the Alternator output. Alternatively, a Magnetic Pickup mounted on the flywheel housing can be used for speed detection (This is selected by PC using the 5200 series configuration software). Rising oil pressure can also be used to disconnect the starter motor; however, it cannot be used for underspeed or overspeed detection.

After the starter motor has disengaged, the **Safety On** timer is activated, allowing Oil Pressure, High Engine Temperature, Under-speed, Charge Fail and any delayed Auxiliary fault inputs to stabilise without triggering the fault.

Once the engine is running, the **Warm Up** timer, if selected is initiated, allowing the engine to stabilise before accepting the load.

If an auxiliary output has been selected to give a **load transfer** signal, this would then activate.

NOTE:-A load transfer will not be initiated until the Oil Pressure has risen. Thus preventing excessive wear on the engine.

On removal of the **Remote Start** signal, the **Stop** delay timer is initiated, once it has timed out, the **load Transfer** signal is de-energised, removing the load. The **Cooling** timer is then initiated, allowing the engine a cooling down period off load before shutting down. Once the **Cooling** timer expires, the **Fuel Solenoid** is de-energised, bringing the generator to a stop.

Should the **Remote Start** signal be re-activated during the cooling down period, the generating set will return to an on load condition.

3.2 MANUAL OPERATION

NOTE:- If a digital input configured to panel lock is active, the LCD will display the icon. When in panel lock, changing module modes will not be possible. Viewing the instruments and event logs is NOT affected by panel lock.

To initiate a start sequence in **MANUAL**, press the pushbutton. When the controller is in the manual mode (indicated by an LED indicator beside the button), pressing the **START** (I) button will initiate the start sequence.

NOTE:- There is no Start Delay in this mode of operation.

If the **pre-heat** output option is selected this timer is then initiated, and the auxiliary output selected is energised.

The **Fuel Solenoid** is energised, and then the **Starter Motor** is engaged.

The engine is cranked for a pre-set time period. If the engine fails to fire during this cranking attempt then the starter motor is disengaged for the pre-set rest period. Should this sequence continue beyond the set number of attempts, the start sequence will be terminated and

Fail to Start fault will be displayed accompanied by a flashing shutdown indicator.

When the engine fires, the starter motor is disengaged and locked out at a pre-set frequency from the Alternator output. Alternatively, a Magnetic Pickup mounted on the flywheel housing can be used for speed detection (This is selected by PC using the 5200 series configuration software). Rising oil pressure can also be used to disconnect the starter motor; however, it cannot be used for underspeed or overspeed detection.

After the starter motor has disengaged, the **Safety On** timer is activated, allowing Oil Pressure, High Engine Temperature, Under-speed, Charge Fail and any delayed Auxiliary fault inputs to stabilise without triggering the fault.

Once the engine is running, the **Warm Up** timer, if selected is initiated, allowing the engine to stabilise before it can be loaded.

The generator will run off load, unless a **Remote Start** signal is applied, and if **Load Transfer** has been selected as a control source, the appropriate auxiliary output selected will activate.

If the **Remote Start** signal is removed, the generator will continue to run **On** load until the **Auto** mode is selected. The **Remote Stop Delay Timer** will time out, the load is then disconnected. The generator will then run **off** load allowing the engine a **cooling** down period.

Selecting **STOP (O)** de-energises the **FUEL SOLENOID**, bringing the generator to a stop.

4 PROTECTIONS

The module will indicate that an alarm has occurred in several ways;

The LCD display will indicate a 'common alarm' either : (warning) or (shutdown)

If appropriate, the LCD display or LED indicators will display the appropriate alarm icon i.e. for battery charging failure :

NOTE:- Alarm icons in the LED display area are 'hid until lit'. This means that the display area appears totally clear, and 'free from clutter'. The advantage of this is that when an alarm does occur, the respective LED icon will illuminate on the otherwise blank fascia. This makes alarm identification much clearer.

If no alarms are present the LCD will extinguish any alarm icons.

In the event of a warning alarm, the LCD will display the appropriate icon. If a shutdown then occurs, the module will display the appropriate icon. The original warning alarm icon will remain displayed.
Example:-

Low battery volts warning (all symbols steady)

Followed by….

Low battery volts warning indicator still present, common alarm indicator has changed to a shutdown symbol and is now flashing.
Also present is the flashing underspeed LED.

Underspeed and Shutdown alarm Icons are displayed flashing. The original warning will remain displayed as long at the triggering conditions remain. Any subsequent warnings or shutdowns that occur will be displayed steady, therefore only the first-up shutdown will appear flashing.

4.1 WARNINGS

Warnings are non-critical alarm conditions and do not affect the operation of the generator system, they serve to draw the operators attention to an undesirable condition.

In the event of a warning alarm, the LCD will display:-

BATTERY CHARGE FAILURE, if the module does not detect a voltage from the warning light terminal on the auxiliary charge alternator the icon will illuminate.

BATTERY LOW VOLTAGE, if the module detects that the plant DC supply has fallen below the low volts setting level, the module will display:-

The Battery Low Voltage alarm is delayed by the Low DC Volts Delay timer.

BATTERY HIGH VOLTAGE, if the module detects that the plant DC supply has risen above the high volts setting level, the module will display:-

FAIL TO STOP, If the module detects the engine is still running when the 'Fail to stop timer' expires, then the module will display:-

NOTE:- 'Fail to Stop' could indicate a faulty oil pressure sender - If engine is at rest check oil sender wiring and configuration.

AUXILIARY INPUTS, if an auxiliary input has been configured as a warning the appropriate LCD segment will be displayed:-

LOW FUEL LEVEL. If the fuel level detected by the fuel level sender falls below the low fuel level setting, a warning will occur.

The icon will illuminate.

4.2 ANALOGUE PRE-ALARMS

The following alarms are termed 'pre-alarms' as they pre warn the operator of a potentially more serious alarm condition. For instance, if the engine temperature rises past the pre alarm level, a warning condition will occur to notify the operator. If the temperature falls below the level, then the alarm ceases, and the set will continue to run as normal. However if the temperature continues to rise until the coolant temperature trip point is reached, the warning is escalated and a high coolant temperature shutdown is initiated.

During a pre-alarm condition, the warning symbol is displayed on the LCD display, along with the appropriate icon:

LOW OIL PRESSURE, if the module detects that the engine oil pressure has fallen below the low oil pressure pre-alarm setting level after the **Safety On** timer has expired, a warning will occur.
The icon will illuminate.

HIGH ENGINE TEMPERATURE if the module detects that the engine coolant temperature has exceeded the high engine temperature pre-alarm setting level after the **Safety On** timer has expired, a warning will occur.
The icon will illuminate.

OVERSPEED, if the engine speed exceeds the pre-alarm trip a warning is initiated.
The icon will illuminate.
Overspeed is not delayed, it is an **immediate warning**.

UNDERSPEED, if the engine speed falls below the pre-set pre-alarm after the Safety On timer has expired, a warning is initiated.
The icon will illuminate.

GENERATOR HIGH FREQUENCY if the module detects a generator output frequency in excess of the pre-set pre-alarm, a warning is initiated.

The Hz↑ icon will illuminate.
Generator High Frequency is not delayed, it is an **immediate warning**.

GENERATOR LOW FREQUENCY, if the module detects a generator output frequency below the pre-set pre-alarm after the Safety On timer has expired, a warning is initiated.

The Hz↓ icon will illuminate.

GENERATOR HIGH VOLTAGE if the module detects a generator output voltage in excess of the pre-set trip a shutdown is initiated.
The Ṽ↑ icon will illuminate.
High voltage is not delayed, it is an **immediate shutdown**.

GENERATOR LOW VOLTAGE if the module detects a generator output voltage below the below the pre-set pre-alarm after the Safety On timer has expired, a warning is initiated.
The Ṽ↓ icon will illuminate.

4.3 HIGH CURRENT WARNING ALARM

GENERATOR HIGH CURRENT, if the module detects a generator output current in excess of the pre-set trip a warning is initiated.
The A↑ icon will illuminate.
If this high current condition continues for an excess period of time, then the alarm is escalated to a shutdown condition. For further details of the high current alarm, please see High Current Shutdown Alarm.

4.4 SHUTDOWNS

Shutdowns are latching and stop the Generator. The alarm must be cleared, and the fault removed to reset the module.

In the event of a shutdown alarm, the LCD will display:-

(flashing).

The appropriate icon will also be displayed flashing

NOTE:- The alarm condition must be rectified before a reset will take place. If the alarm condition remains, it will not be possible to reset the unit (The exception to this is the Low Oil Pressure alarm and similar 'delayed alarms', as the oil pressure will be low with the engine at rest). Any subsequent warnings or shutdowns that occur will be displayed steady, therefore only the first-up shutdown will appear flashing.

FAIL TO START, if the engine does not fire after the pre-set number of attempts has been made a shutdown will be initiated.

The icon will illuminate.

EMERGENCY STOP, removal of the **positive DC** Supply from the Emergency Stop input initiates the following sequence, firstly it will initiate a controlled shutdown of the Generator and prevent any attempt to restart the Generator until the Emergency Stop push-button has been reset. Secondly, it removes the **positive DC** supply from both the Fuel Solenoid and Starter Solenoid.

The icon will illuminate.

NOTE:- The Emergency Stop positive signal must be present otherwise the unit will shutdown.

LOW OIL PRESSURE, if the module detects that the engine oil pressure has fallen below the low oil pressure trip setting level after the **Safety On** timer has expired, a shutdown will occur.

The icon will illuminate.

HIGH ENGINE TEMPERATURE if the module detects that the engine coolant temperature has exceeded the high engine temperature trip setting level after the **Safety On** timer has expired, a shutdown will occur.

The icon will illuminate.

OVERSPEED, if the engine speed exceeds the pre-set trip a shutdown is initiated.

The icon will illuminate.

Overspeed is not delayed, it is an **immediate shutdown**.

NOTE:-However, during the start-up sequence the overspeed trip logic can be configured to allow an extra trip level margin, this is used to prevent nuisance tripping on start-up - Refer to the 5200 series configuration software manual under heading 'Overspeed Overshoot' for details.

UNDERSPEED, if the engine speed falls below the pre-set trip after the Safety On timer has expired, a shutdown is initiated.

The icon will illuminate.

GENERATOR HIGH FREQUENCY if the module detects a generator output frequency in excess of the pre-set trip a shutdown is initiated.

The Hz↑ icon will illuminate.
Generator High Frequency is not delayed, it is an **immediate shutdown**.

GENERATOR LOW FREQUENCY, if the module detects a generator output frequency below the pre-set trip after the Safety On timer has expired, a shutdown is initiated.

The Hz↓ icon will illuminate.

GENERATOR HIGH VOLTAGE if the module detects a generator output voltage in excess of the pre-set trip a shutdown is initiated.

The ~V↑ icon will illuminate.
High voltage is not delayed, it is an **immediate shutdown**.

GENERATOR LOW VOLTAGE if the module detects a generator output voltage below the below the pre-set trip after the Safety On timer has expired, a shutdown is initiated.

The ~V↓ icon will illuminate.

OIL PRESSURE SENDER OPEN CIRCUIT, if the module detects a loss of signal from the oil pressure sender (open circuit) a shutdown is initiated. The LCD will indicate:-
(Steady) (In addition '-----'on the engine oil pressure instrument). Sender failure is not delayed, it is an **immediate shutdown**.

AUXILIARY INPUTS, if an auxiliary input has been configured as a shutdown the appropriate LCD segment will be displayed:-
!▶

LOSS OF SPEED SIGNAL, if the speed sensing signal is lost during cranking, a shutdown is initiated.
The ! icon will illuminate. (Steady) (In addition '-----'on the engine RPM instrument).

NOTE:- This will only occur if the speed sensing signal is lost during cranking or during the safety on timer. If the signal is lost during normal operation, the Generator will shutdown with an Under-speed alarm.

4.5 HIGH CURRENT SHUTDOWN ALARM

GENERATOR HIGH CURRENT, if the module detects a generator output current in excess of the pre-set trip a warning is initiated. This warning will continue for a period of time depending upon the level of overload that the generator is subjected to, and the configuration setting for Generator High Current in the 5200 series configuration software.
For instance, the factory default settings for Generator High Current allow for a loading of the generator to 110% for one hour. That is to say if the generator load level exceeds the trip point by 10%, a warning alarm will occur while the overload condition exists. If the load level does not drop to normal levels within one hour, the set is stopped, the 5210 module displaying either shutdown alarm or electrical trip alarm depending upon module configuration.

Additionally, the A↑ icon will illuminate.

NOTE:- Higher overload levels will result in a faster acting shutdown condition. For instance with the factory default configuration, an overload level twice that of the trip level (typically 200%) will result in a Generator High Current shutdown condition after 36 seconds.
For details of the relationship between the overload and the shutdown time, please see the Appendix section of this manual.

4.6 ELECTRICAL TRIPS

Electrical trips are latching and stop the Generator but in a controlled manner. On initiation of the electrical trip condition the module will de-energise the **'Load Transfer'** Output to remove the load from the generator. Once this has occurred, the module will start the Cooling timer and allow the engine to cool, off-load before shutting down the engine. The alarm must be accepted and cleared, and the fault removed to reset the module.

In the event of an electrical trip alarm, the icon will illuminate.

Additionally, During the cooling timer the warning symbol is displayed followed by the flashing shutdown symbol when the cooling timer has expired.

AUXILIARY INPUTS, if an auxiliary input has been configured as an electrical trip the appropriate LCD segment will be displayed:-

!▶

GENERATOR HIGH CURRENT, if the module detects a generator output current in excess of the pre-set trip a warning is initiated.

The A↑ icon will illuminate.
If this high current condition continues for an excess period of time, then the alarm is escalated to either a shutdown or electrical trip condition (depending upon module configuration). For further details of the high current alarm, please see High Current Shutdown Alarm.

5 LCD INDICATORS AND LOGO INSERT

USER CONFIGURABLE LCD indicators
These indicators can be configured by the user to indicate any one of ***100+ different functions*** based around the following:-

- **INDICATIONS** - Monitoring of a digital input and indicating associated functioning user's equipment - *Such as Battery Charger On or Louvre Open, etc*.
- **WARNINGS** and **SHUTDOWNS** - Specific indication of a particular warning or shutdown condition, backed up by LCD indication - *Such as Low Oil Pressure Shutdown, Low Coolant level, etc.*
- **STATUS INDICATIONS** - Indication of specific functions or sequences derived from the modules operating state - *Such as Safety On, Pre-heating, Panel Locked, Generator Available, etc.*

These indicators are annunciated using a removable insert card. Additionally the module's logo can be changed to suit generator manufacturer's requirements. This can be used for instance to give custom branding to the module, or even include the service telephone number.

DSE have produced the 'insert card creator' software, shipped with the DSE Software CD to ease the production of text and logo insert cards to suit your application.

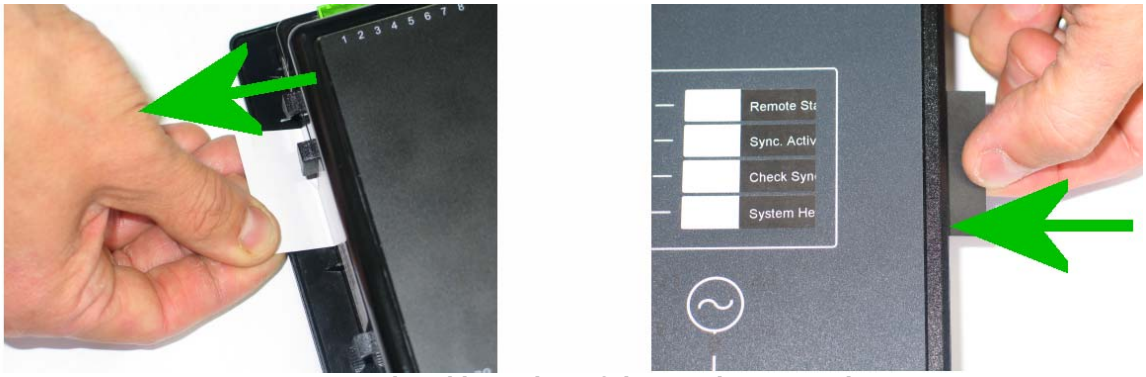

Removal and insertion of the text insert card

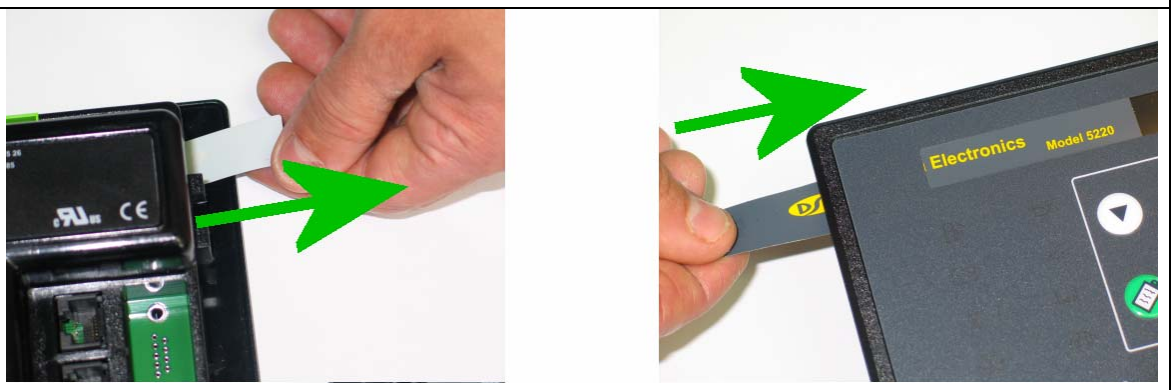

Removal and insertion of the Logo insert card

6 DESCRIPTION OF CONTROLS

The following section details the function and meaning of the various controls on the module.

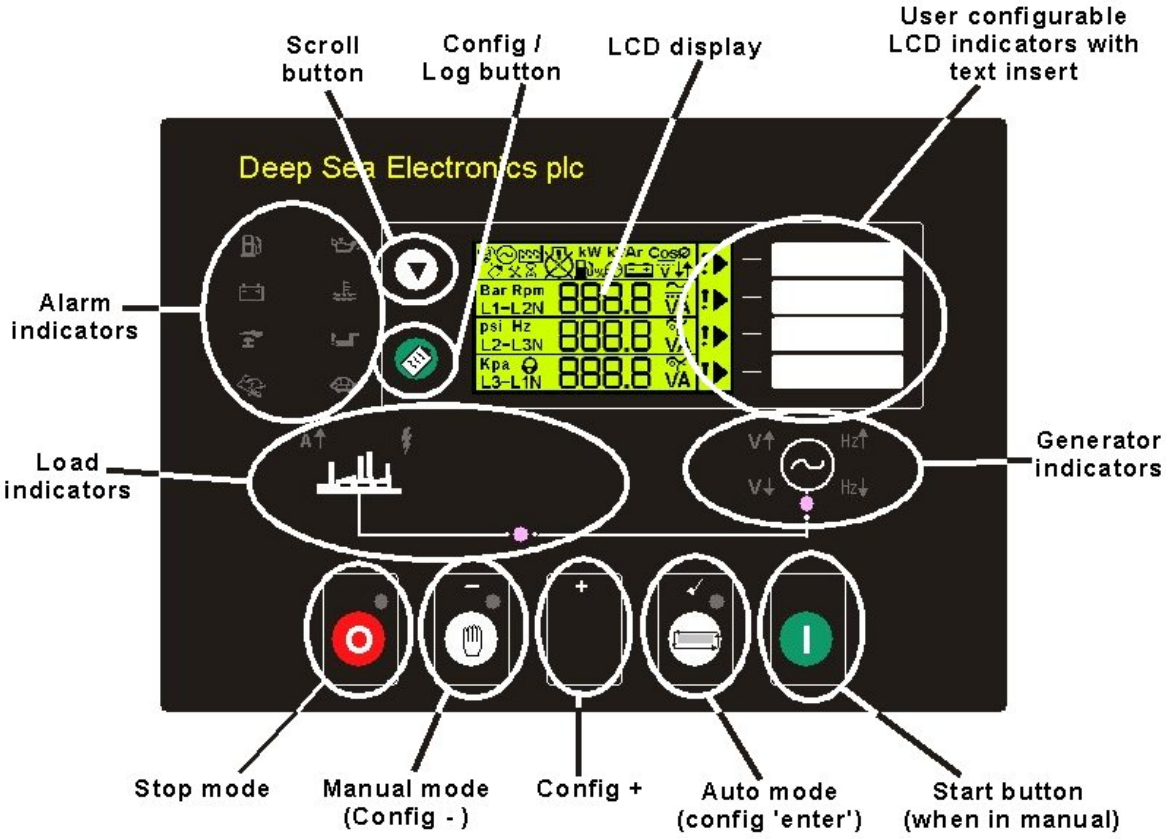

6.1 TYPICAL LCD DISPLAY SCREENS

INSTRUMENTS

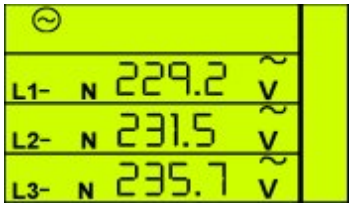

The LCD displays the various engine parameters such as **'ENGINE SPEED'**, **'OIL PRESSURE', 'HOURS RUN'**, etc.
Each instrument is displayed with the appropriate units of measure.

In this example, the values being displayed are Generator phase to neutral L1-N, AC voltages V.

STATUS ICONS

The LCD also displays the status of the controller by showing (for example) an hourglass symbol when a timer is in progress or by displaying a common alarm symbol. This display is indicating that the timer is in progress and a warning alarm is present. See the 'Protections' section of this manual for details of the alarms.
In this example the values being displayed are the three factory AC currents A

USER DEFINED INDICATIONS

The LCD displays the user-defined indications when configured and active. The icons will illuminate and point to the appropriate text insert label. These indications can be used to indicate the operation of external equipment (i.e. 'Battery Charger On', 'Breaker Closed' etc) or to indicate internal states (i.e. Engine Running, Safety On, etc).

USER DEFINED ALARMS

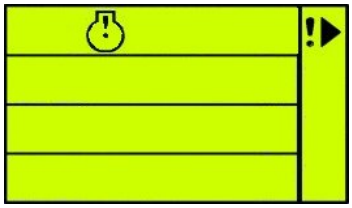

The LCD displays the user-defined alarms when configured and active. The icons will illuminate and point to the appropriate text insert label. These alarms can be used to indicate the operation of external alarms (i.e. 'Low Fuel Level', 'Low Coolant level' etc) or to indicate internal alarms (i.e. Fail to Stop, MPU fault, etc).

HOURS RUN COUNTER

The LCD displays the generator hours run time while both the generator symbol and the clock symbol are present.

In this example the hours run time would read 21 hours and 35 minutes.

HOURS RUN (100 hrs +)

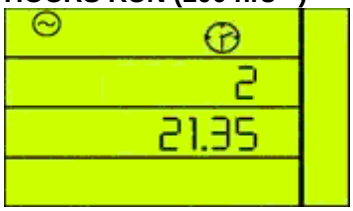

The hours run up to and including 99 are displayed on the third line of the display. Minutes run are displayed after the decimal point. All hours above 99, (i.e. the hundreds, thousands and tens of thousands units) are displayed on the second line of the display.

In this example the hours run time would read 221 hours and 35 minutes.

HOURS RUN (1000 hrs +)

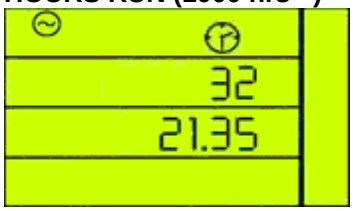

All hours above 99, (i.e. the hundreds, thousands and tens of thousands units) are displayed on the second line of the display.

In this example the hours run time would read 3221 hours and 35 minutes.

6.2 LCD DISPLAY AREAS

Instrument values

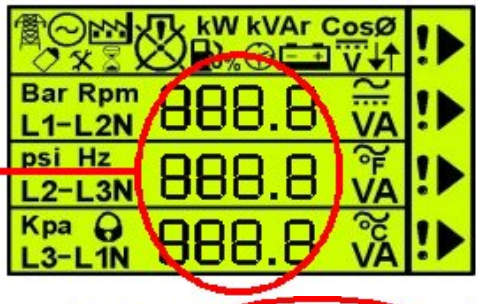

Display information & units of measure

Alarm icons

Status icons

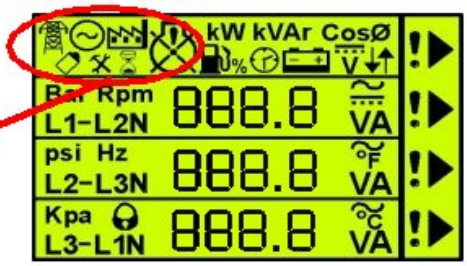

User configurable display icons

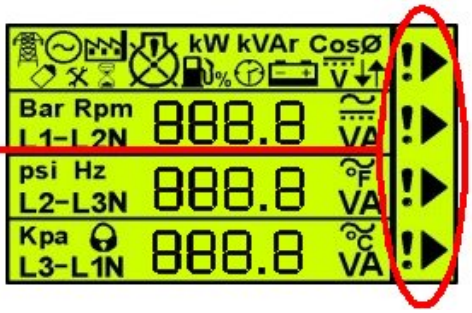

6.3 VIEWING THE INSTRUMENTS

It is possible to scroll to display the different instruments by repeatedly operating the scroll button. Once selected the instrument will remain on the LCD display until the user selects a different instrument or after a period of inactivity, the module will revert to the initial display (Hz/RPM).

Instrument Page Order:-

- Generator RPM / Frequency (Hz)
- *AC Voltage Line-Neutral*
- *AC Voltage Line-Line*
- *Oil Pressure*
- *Coolant temperature*
- *Fuel level (%)*
- *Engine Hours Run*
- *DC Battery Voltage*
- *AC Line Current*
- *AC Line power (kW)*
- *AC Line power (kVA)*
- *AC phase angle (cos ∅)*

Manually Selecting an Instrument

Initial display (Hz/RPM)		
Pressing the **DOWN** button the LCD will then show (Generator L-N voltages)	▼	
Pressing the **DOWN** button the LCD will then show (Generator L-L voltages)	▼	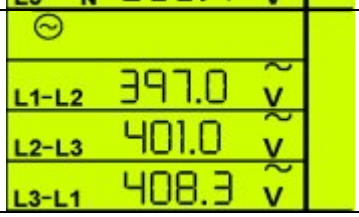

Pressing the ▼ button again will scroll through each individual instrument eventually returning to the original instrument displayed.

⚠NOTE:-Once selected the instrument will remain on the LCD display until the user selects a different instrument or after a period of inactivity, the module will revert to the initial display.

6.4 VIEWING THE EVENT LOG

The model 5210 remote start module maintains a log of the last 15 shutdown alarms to enable the operator or engineer to view the past alarms history. Only shutdown and electrical trip alarms are logged; warning alarms are not logged. Once the log is full (15 shutdown alarms), any subsequent shutdown alarms will overwrite the oldest entry in the log. Hence, the log will always contain the 15 most recent shutdown alarms.
The alarm is logged, along with the date and time of the event in the format shown in this example.

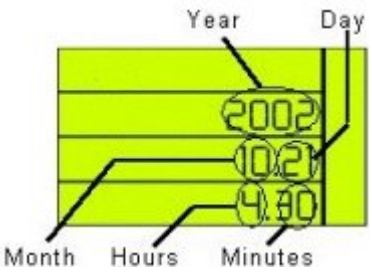

To view the event log, press the log button . The LCD display will flash the log symbol to confirm that the event log has been entered.

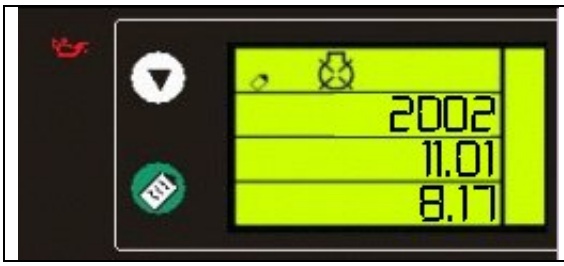	In this example, the oil can symbol represents an oil pressure shutdown, backed up by the flashing shutdown symbol in the LCD display. The value displayed means that the oil pressure shutdown occurred on November 1st 2002 at 8:17.

Press down to view the next most recent shutdown alarm :

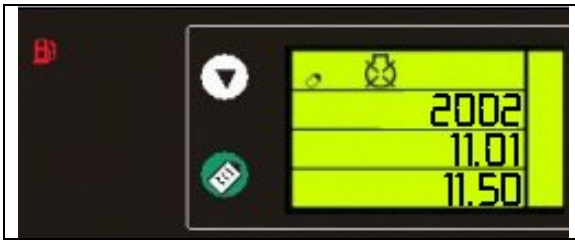	In this example, the fuel pump symbol represents a fuel level shutdown, backed up by the flashing shutdown symbol in the LCD display. The value displayed means that the oil pressure shutdown occurred on November 1st 2002 at 11:50.

Continuing to press down will cycle through the past alarms until all 15 logged alarms have been viewed, after which the most recent alarm will again be showed and the cycle will begin again.

To exit the event log and return to viewing the instruments, press the log button.

6.5 INDICATORS

COMMON ALARM LCD indicators These indicate when an alarm condition is present. The Alarm icons or LEDs will detail the exact nature of the alarm.	(warning) or (shutdown)
USER CONFIGURABLE LCD INDICATORS These LCD's can be configured by the user to indicate any on of the ***different functions*** based around the following:- • **INDICATIONS** - Monitoring of a digital input and indicating associated functioning user's equipment - *Such as Battery Charger On or Louvres Open, etc*. • **WARNINGS** and **SHUTDOWNS** - Specific indication of a particular warning or shutdown condition, backed up by LCD indication (!)- *Such as Low Oil Pressure Shutdown, Low Coolant level, etc.* • **STATUS INDICATIONS** - Indication of specific functions or sequences derived from the modules operating state - *Such as Safety On, Pre-heating, Generator Available, etc.*	

6.6 CONTROLS

STOP/RESET This button places the module into its **Stop/reset** mode. This will clear any alarm conditions for which the triggering criteria have been removed. If the engine is running and this position is selected, the module will automatically instruct the changeover device to un-load the generator *('**Load transfer**' becomes inactive (if used))*. The fuel supply will be removed and engine will be brought to a standstill. Should a **remote start signal** be present while operating in this mode, a remote start will not occur.	O
MANUAL This mode is used to allow manual control of the generator functions. Once in **Manual mode** the module will respond to the start (I) button and start the engine and run off load. If the engine is running off-load in the **Manual mode** and a **remote start signal** becomes present, the module will automatically instruct the changeover device to place the generator on load *('**Load transfer**' becomes active (if used))*. Should the **remote start signal** then be removed the generator will remain on load until either the **'STOP/RESET'** or **'AUTO'** positions is selected.	
AUTO This button places the module into its **'Automatic'** mode. This mode allows the module to control the function of the generator automatically. The module will monitor the **remote start input** and once a start condition is signalled the set will be automatically started and placed on load *('**Load transfer**' becomes active (if used))*. If the starting signal is removed the module will automatically transfer the load from the generator and shut the set down observing the **stop delay timer** and **cooling timer** as necessary. The module will then await the next start event. *For further details, please see the more detailed description of 'Auto Operation' earlier in this manual.*	AUTO
START This button is only active in MANUAL mode. Pressing this button in manual mode will start the engine and run off load. If the engine is running off-load in the **Manual mode** and a **remote start signal** becomes present, the module will automatically instruct the changeover device to place the generator on load *('**Load transfer**' becomes active (if used))*. Should the **remote start signal** then be removed the generator will remain on load until either the **'STOP/RESET'** or **'AUTO'** positions is selected.	I

7 FRONT PANEL CONFIGURATION

Although full configuration of the module is possible using the 5200 series configuration software, selected parameters that may require adjustment in the field are able to be adjusted via the module's fascia.

7.1 ACCESSING THE FRONT PANEL CONFIGURATION EDITOR

This configuration mode allows the operator limited customising of the way the module operates.

Operation	Detail
To enter the **'configuration mode'** press both the **CONFIGURE/LOG** and **STOP** buttons together.	+

7.1.1 ENTERING THE CONFIGURATION EDITOR PIN NUMBER

If the module PIN number has been set, the PIN number request is then shown. The configuration cannot be viewed or changed until the PIN number is correctly entered. If no PIN has been set, then skip to the next section.

Pin
- - - -

The first - is flashing.

Pin
1 - - -

Press + or – buttons to adjust it to the correct value for the first digit of the PIN number.
Press ✓ when the first digit is correctly entered.
The value you have entered will 'disappear' to maintain security.

Pin
- - - -

The second - is now flashing. Press + or – buttons to adjust it to the correct value for the second digit of the PIN number.
Press ✓ when the second digit is correctly entered.

Pin
- - - -

The third - is now flashing. Press + or – buttons to adjust it to the correct value for the third digit of the PIN number.
Press ✓ when the third digit is correctly entered.

Pin
- - - -

The fourth - is now flashing. Press + or – buttons to adjust it to the correct value for the fourth digit of the PIN number. Press ✓ when the fourth digit is correctly entered.

NOTE: - When ✓ is pressed after editing the final PIN digit, the PIN is checked for validity. If the number is not correct, the editor is automatically exited. To retry you must re-enter the editor as described above.

If the PIN is entered correctly, The first configurable parameter is then displayed :

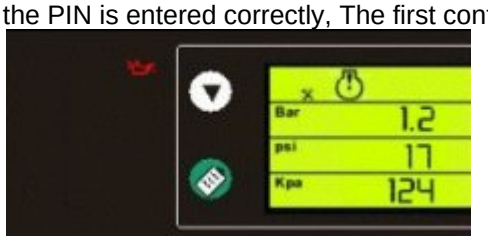

The parameter being displayed in this example is the Low Oil Pressure prealarm, being indicated by the illuminated oil can.

The warning symbol is indicating that it is the warning (pre-alarm) parameter that is being displayed.

NOTE:- To exit the front panel configuration editor at any time, press the Stop/Reset button.

Ensure you have saved any changes you have made by pressing the ✓ button first.

7.2 EDITING AN ANALOGUE VALUE

Press the ✓ button to enter edit mode. This is indicated by the flashing parameter. In this example, entering edit mode will cause the 1.2 value to flash.

When in edit mode, pressing the + or — buttons will adjust the parameter to the desired value. Press the ✓ button to 'save' the value. The value will stop flashing to confirm that it has been saved.

To select another value to edit, press the + button :

The next parameter being displayed in this example is the Low Oil Pressure shutdown, being indicated by the illuminated oil can.

The shutdown symbol is indicating that it is the shutdown (trip) parameter that is being displayed.

Continuing to press the + or — buttons will cycle through the adjustable parameters in the following order :

Config' Section	Parameter	Type	Icons displayed
Analogue senders	Low Pressure	Pre Alarm	
	Low Pressure	Trip	
	High Temperature	Pre Alarm	
	High Temperature	Trip	
	Fuel Level	Pre Alarm	
Calendar	Date/time	Date/time	
Timers	Start delay	Timer	2
	Preheat	Timer	3
	Crank attempt	Timer	4
	Crank rest	Timer	5
	Safety delay	Timer	6
	Overspeed overshoot	Timer	7
	Warming up	Timer	8
	Return delay	Timer	10
	Cooling run	Timer	11
	E.T.S.(Energise to stop) solenoid hold	Timer	12
Generator output	Generator Under Voltage L1-N	Trip	
	Generator Under Voltage L1-N	Pre Alarm	
	Generator Over Voltage	Pre Alarm	
	Generator Over Voltage	Trip	
	Generator Under Frequency	Trip	
	Generator Under Frequency	Pre Alarm	
	Generator Over Frequency	Pre Alarm	
	Generator Over Frequency	Trip	
	Delayed Overcurrent %	Trip	
Engine speed	Under Speed (RPM)	Trip	
	Under Speed (RPM)	Pre Alarm	
	Over Speed (RPM)	Pre Alarm	
	Over Speed (RPM)	Trip	
DC Voltages	Low DC Voltage	Warning	
	High DC Voltage	Warning	
	Charge Alternator Failure	Warning	

NOTE: - The timers are numbered to enable them to be identified when in configuration mode. Some numbers are reserved so do not appear in the list.
In the following example timer number 2 ('Start delay' from the above list) is currently set to 5.0 seconds.

Ie the 'hour glass' indicates that it is a timer being displayed. The '2' indicates that it is timer number 2 (Start delay). The current setting is 5.0 (seconds).

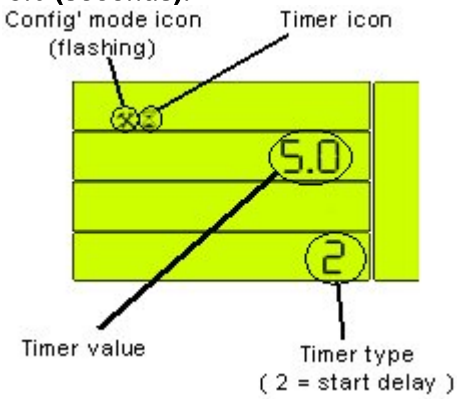

7.2.1 EDITING THE CURRENT DATE/TIME

The date/time should be initially set using the 5200 series configuration software. However, there may be certain circumstances where a minor change to the module's time is required. One such instance is correction for daylight saving.

NOTE:- The 5210 controller maintains the current date/time so long as it connected to a DC supply within the operating range. Disconnection of the supply will result in the date/time being frozen until the module's power is reapplied. When this occurs, the date/time will resume operation from the time the power was disconnected. If this occurs, you can use the front panel editor to correct the date/time or reset it using the 5200 series configuration software.

NOTE: - The calendar is used by the 5210's run scheduler and the event log.

Press the configure/log and Stop/Reset buttons simultaneously. The LCD configure indicator will flash to indicate that the module is in 'configuration mode'. Release the Stop/Reset button then release the configure/log button.

Press the + button until the calendar is shown :

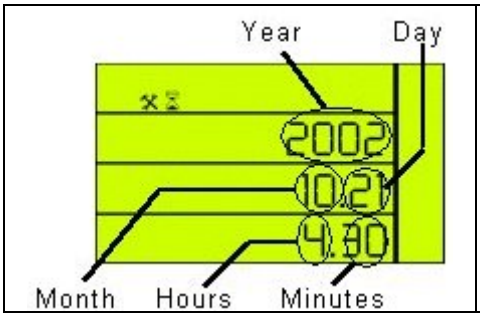	This display is showing a time of 4:30 on 21st October 2002.

To edit the time, press the ✓ button. The time, 4.30 in this example, will begin flashing. Press the + or – buttons to adjust the time in one minute steps until the desired time is shown. Press the ✓ button to save the change. The time stops flashing to confirm that is has been successfully stored.

8 INSTALLATION INSTRUCTIONS

The model **DSE 5210** Module has been designed for front panel mounting. Fixing is by 4 clips for easy assembly.

8.1 PANEL CUT-OUT

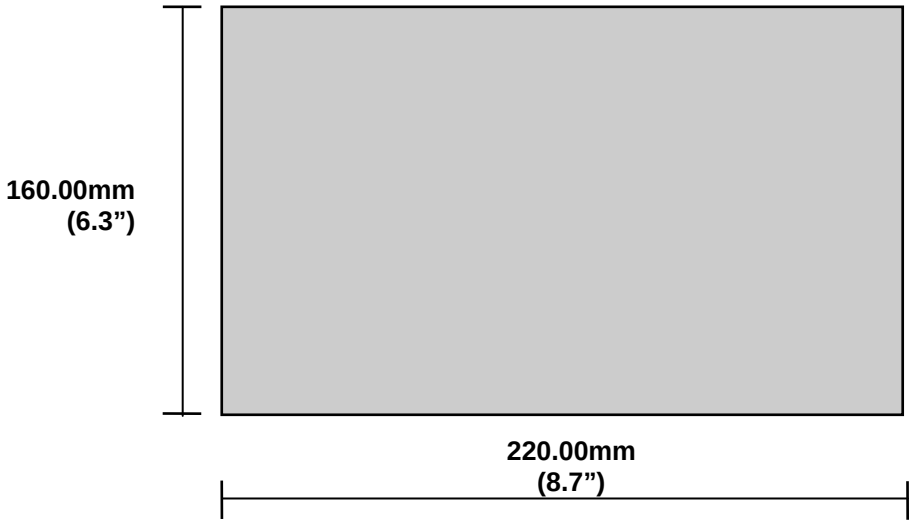

Maximum panel thickness – 8mm (0.3”)
In conditions of excessive vibration the module should be mounted on suitable anti-vibration mountings.

8.2 COOLING

The module has been designed to operate over a wide temperature range **-30 to +70º C**. Allowances should be made for the temperature rise within the control panel enclosure. Care should be taken **NOT** to mount possible heat sources near the module unless adequate ventilation is provided. The relative humidity inside the control panel enclosure should not exceed **95%**.

8.3 UNIT DIMENSIONS

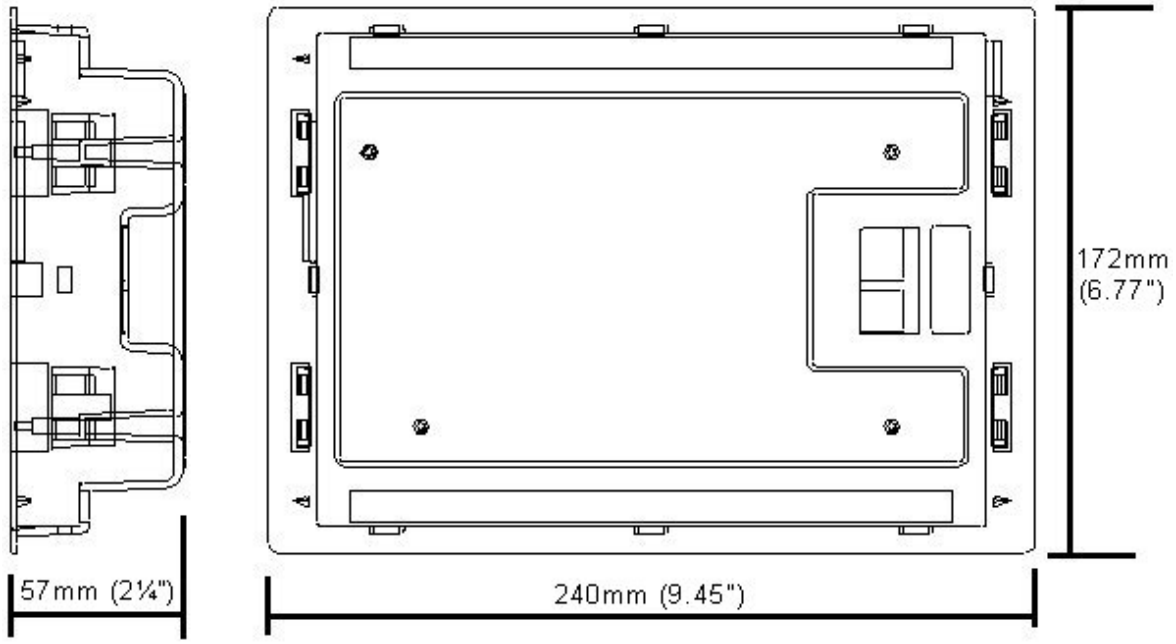

Panel cut-out 220mm x 160mm (8.7” x 6.3”)

8.4 FRONT PANEL LAYOUT

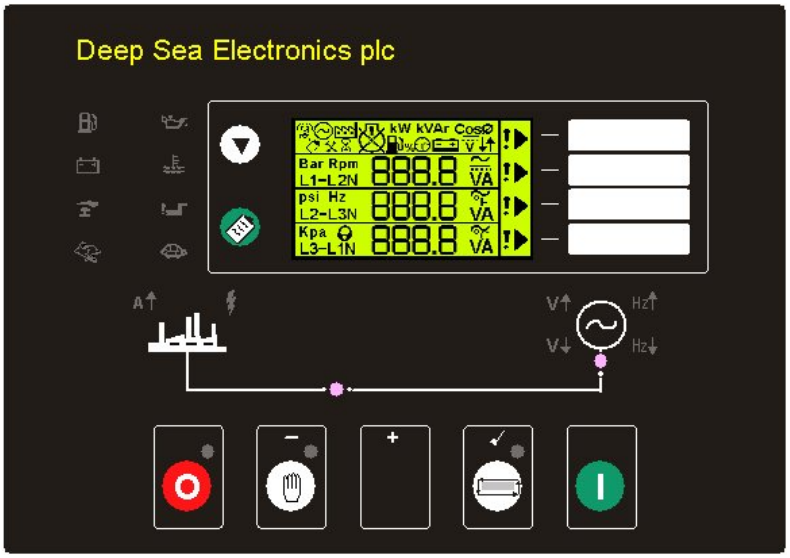

8.5 REAR PANEL LAYOUT

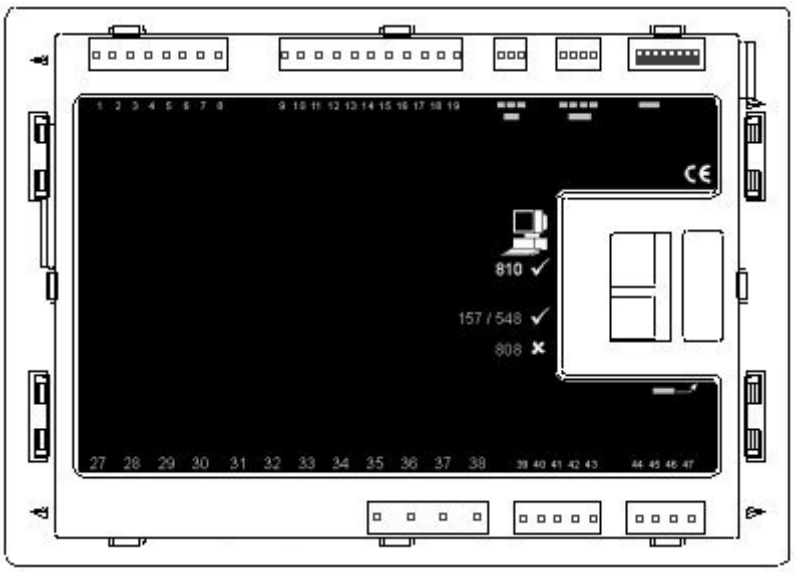

9 ELECTRICAL CONNECTIONS

Connections to the Module are via plug and sockets.

9.1 CONNECTION DETAILS

The following describes the connections and recommended cable sizes to the 7 plugs and sockets on the rear of the Module. See rear panel layout **FIG 6**.

9.1.1 PLUG "A" 8 WAY

PIN No	DESCRIPTION	CABLE SIZE	NOTES
1	DC Plant Supply Input (negative)	2.5mm	
2	DC Plant Supply Input (positive)	2.5mm	(Recommended Maximum Fuse 21A)
3	Emergency Stop Input	2.5mm	Plant Supply positive. In addition, supplies fuel & start outputs. (Recommended Maximum Fuse 32A)
4	Fuel relay Output	2.5mm	Plant Supply positive from pin 3. 16 Amp rated.
5	Start relay Output	2.5mm	Plant Supply positive from pin 3. 16 Amp rated.
6	Auxiliary Output relay 1	1.0mm	Plant Supply positive. 5 Amp rated.
7	Auxiliary Output relay 2	1.0mm	Plant Supply positive. 5 Amp rated.
8	Auxiliary Output relay 3	1.0mm	Plant Supply positive. 5 Amp rated.

9.1.2 PLUG "B" 11 WAY

PIN No	DESCRIPTION	CABLE SIZE	NOTES
9	Charge fail / excite	2.5mm	Do not connect to ground (battery –ve)
10	Auxiliary input 1	0.5mm	Switch to negative
11	Auxiliary input 2	0.5mm	Switch to negative
12	Auxiliary input 3	0.5mm	Switch to negative
13	Auxiliary input 4	0.5mm	Switch to negative
14	Auxiliary input 5	0.5mm	Switch to negative
15	Auxiliary input 6	0.5mm	Switch to negative
16	Functional Earth	2.5mm	Connect to a good clean earth point
17	Magnetic pickup positive	0.5mm	Connect to Magnetic Pickup device
18	Magnetic pickup negative	0.5mm	Connect to Magnetic Pickup device
19	Not connected	-	

NOTE:- Ensure magnetic pickup screen is connected to ground at one end only.

NOTE:- Connector C is not fitted to the 5210 remote start module.

9.1.3 PLUG "D" 4 WAY (OPTIONAL)

PIN No	DESCRIPTION	CABLE SIZE	NOTES
23	RS485 port Common	0.5mm	Use only 120Ω RS485 approved cable
24	RS485 port B	0.5mm	Use only 120Ω RS485 approved cable
25	RS485 port A	0.5mm	Use only 120Ω RS485 approved cable
26	Not connected	-	

NOTE:- Connector E is not fitted to the 5210 remote start module.

9.1.4 PLUG "F" 4 WAY

PIN No	DESCRIPTION	CABLE SIZE	NOTES
35	Generator L1 voltage monitoring input	1.0mm	Connect to generator L1 output (AC) (Recommend 2A fuse)
36	Generator L2 voltage monitoring input	1.0mm	Connect to generator L2 output (AC) (Recommend 2A fuse)
37	Generator L3 voltage monitoring input	1.0mm	Connect to generator L3 output (AC) (Recommend 2A fuse)
38	Generator Neutral input	1.0mm	Connect to generator Neutral terminal (AC)

9.1.5 PLUG "G" 5 WAY

PIN No	DESCRIPTION	CABLE SIZE	NOTES
39	CT Secondary for L1	2.5mm	Connect to secondary of L1 monitoring CT
40	CT Secondary for L2	2.5mm	Connect to secondary of L2 monitoring CT
41	CT Secondary for L3	2.5mm	Connect to secondary of L3 monitoring CT
42	CT secondary common	2.5mm	Connect to secondary of all monitoring CT's
43	Not connected	-	

9.1.6 PLUG "H" 4 WAY

PIN No	DESCRIPTION	CABLE SIZE	NOTES
44	Oil Pressure Input	0.5mm	Connect to Oil pressure sender
45	Coolant Temperature Input	0.5mm	Connect to Coolant Temperature sender
46	Fuel Level input	0.5mm	Connect to Fuel Level sender
47	Sender Common Return	0.5mm	Return feed for senders*.

NOTE*:- If using single terminal senders refer to connection diagram. If using earth return type senders connect return terminals to pin 47 and also connect pin 47 to earth. This is detailed in the Appendix section entitled "Sender wiring recommendations" elsewhere in this manual.

9.1.7 PC CONFIGURATION INTERFACE CONNECTOR

8-way connector allows connection to PC via the 810 configuration interface. Module can then be re-configured utilising the **5200 series configuration software.**

9.1.8 EXPANSION OUTPUT CONNECTOR

The expansion connector allows connection to the 157 relay expansion module or to the 548 LED Remote annunciator module.

9.2 CONNECTOR FUNCTION DETAILS

The following describes the functions of the 3 connectors on the rear of the module. See rear panel layout **FIG 5**.

9.2.1 PLUG "A" 8 WAY

PIN No	DESCRIPTION
1	DC Supply negative. System DC negative input. (Battery Negative).
2	DC Supply positive. System DC positive input. (Battery Positive).
3	Emergency Stop input. Internally linked to Starter and Fuel outputs. If this input is not connected to positive the module will be locked out, and if the engine is running it will shutdown immediately. The Positive Supply is also removed from Starter and Fuel outputs, therefore only a single pole Emergency Shutdown button is required.
4	Fuel Relay output. Plant Supply positive from pin 3. Used to control the fuel solenoid or engine fuel control system.
5	Starter Relay output. Plant Supply positive from pin 3. Used to control the Starter Motor.
6	Auxiliary Relay output 1. Plant Supply positive. Configurable output, see Calibration Manual for options available.
7	Auxiliary Relay output 2. Plant Supply positive. Configurable output, see Calibration Manual for options available.
8	Auxiliary Relay output 3. Plant Supply positive. Configurable output, see Calibration Manual for options available.

9.2.2 PLUG "B" 11 WAY

PIN No	DESCRIPTION
9	Charge Fail input / Excitation output. Supplies excitation to the Plant Battery Charging Alternator, also an input for the Charge Fail detection circuitry.
10	Auxiliary input 1. This is a negative switched configurable input, see Calibration Manual for options available. It is possible to configure the input to be a normally closed signal or a normally open signal.
11	Auxiliary input 2. This is a negative switched configurable input, see Calibration Manual for options available. It is possible to configure the input to be a normally closed signal or a normally open signal.
12	Auxiliary input 3. This is a negative switched configurable input, see Calibration Manual for options available. It is possible to configure the input to be a normally closed signal or a normally open signal.
13	Auxiliary input 4. This is a negative switched configurable input, see Calibration Manual for options available. It is possible to configure the input to be a normally closed signal or a normally open signal.
14	Auxiliary input 5. This is a negative switched configurable input, see Calibration Manual for options available. It is possible to configure the input to be a normally closed signal or a normally open signal.
15	Auxiliary input 6. This is a negative switched configurable input, see Calibration Manual for options available. It is possible to configure the input to be a normally closed signal or a normally open signal.
16	Functional Earth - Ensure connection to a good clean earth point.
17	Magnetic Input positive. An AC signal from the magnetic pickup positive for speed sensing.
18	Magnetic Input negative. An AC signal from the magnetic pickup negative for speed sensing.
19	Not connected

NOTE:- Ensure magnetic pickup screen is connected to ground at one end only.

NOTE:- Connector C is not fitted to the 5210 remote start module.

9.2.3 PLUG "D" 4 WAY (OPTIONAL, FITTED TO RS485 CONTROLERS ONLY)

PIN No	DESCRIPTION
23	RS485 port Common
24	RS485 port B. Use only screened 120Ω cable approved specifically for use in RS485 applications.
25	RS485 port A. Use only screened 120Ω cable approved specifically for use in RS485 applications.
26	Not used. Do not connect to this terminal.

NOTE:- Connector E is not fitted to the 5210 remote start module.

9.2.4 PLUG "F" 4 WAY

PIN No	DESCRIPTION
35	Generator L1 sensing input. Connect to alternator L1 output.
36	Generator L2 sensing input. Connect to alternator L2 output. If using single phase only do not connect this terminal.
37	Generator L3 sensing input. Connect to alternator L3 output. If using single phase only do not connect this terminal.
38	Generator N sensing input. Connect to alternator N output.

9.2.5 PLUG "G" 5 WAY

PIN No	DESCRIPTION
39	Generator L1 current transformer connection.
40	Generator L2 current transformer connection. If single phase is used do not connect this pin.
41	Generator L3 current transformer connection. If single phase is used do not connect this pin.
42	Generator current transformer common connection and CT earth connection.
43	Not used. Do not connect to this terminal.

9.2.6 PLUG "H" 4 WAY

PIN No	DESCRIPTION
44	Oil Pressure sensing input. Connect to resistive type oil pressure sender. Refer to connection diagram for details.
45	Coolant Temperature sensing input. Connect to resistive type coolant temperature sender. Refer to connection diagram for details.
46	Fuel Level sensing input. Connect to resistive type fuel level sender. Refer to connection diagram for details.
47	Sender Common connection. Return feed from sender units - refer to connection diagram for details.

9.2.7 PURCHASING ADDITIONAL CONNECTOR PLUGS FROM DSE

If you require additional plugs from DSE, please contact our Sales department using the part numbers below.

5210 Terminal	Connector	Plug description	DSE Part number
1-8	A	BL08 8way 5.08mm spacing connector plug	007-125
9-19	B	BL11 11way 5.08mm spacing connector plug	007-135
23-26	D	BL04 4way 3.81mm spacing connector plug	007-408
35-38	F	BL04 4way 10.16mm spacing connector plug	007-003
39-43	G	BL05 5way 5.08mm spacing connector plug	007-329
44-47	H	BL04 4way 5.08mm spacing connector plug	007-100

NOTE:- Connectors C and E are not fitted to the 5210 remote start module.

10 SPECIFICATION

DC Supply	**Continuous voltage rating :** 8V to 35V
	Cranking dip protection : Able to survive 0V for 50mS, providing supply was at least 10V before dropout and supply recovers to 5V. This is achieved without the need for internal batteries
	Charge Fail/ Excitation: 0V to 35V fixed power source 25W
	Max. Standby Current: 250mA at 12V. 125mA at 24V.
	Max. Operating Current: 425mA at 12V. 215mA at 24V
Alternator Input	**Range:** 15V - 277(ph-N) (+20%) 50Hz - 60Hz 30V - 480(ph-ph) (+20%) 50Hz - 60Hz
	Accuracy: 1% of full scale Average sensing
	Supported topologies: 3 Phase 4wire Single phase 2 wire 3 phase 3 wire 2 Phase 3 wire L1 & L2 2 Phase 3 wire L1 & L3
CT's	**Burden:** 0.5VA
	Primary rating: 1A - 6000A (user selectable)
	Secondary rating: 5A secondary
	Accuracy of measurement: 1% of full load rating (when using 0.5% or better CTs) Lower class CTs will reduce the overall accuracy of the reading.
	Recommendations: Class 1 required for instrumentation Protection class required if using for protection.
Magnetic Pickup	**Voltage range :** +/- 0.5V minimum (during cranking) to 70V Peak
	Frequency range: 10,000 Hz (max)
Relay outputs	**Fuel:** 16 Amp DC at supply voltage
	Start: 16 Amp DC at supply voltage
	Auxiliary outputs 1,2,3: 5 Amp DC at supply voltage
Dimensions	**Overall**: 240mm x 172 mm x 57mm (9 ½" x 6 ¾" x 2 ¼")
	Panel cut-out: 220mm x 160mm (8.7" x 6.3") Max panel thickness 8mm (0.3")

Electrical Safety /Electromagnetic Compatibility	**BS EN 60950** Safety of information technology equipment, including electrical business equipment		
	BS EN 61000-6-2 EMC Generic Emission Standard (Industrial)		
	BS EN 61000-6-4 EMC Generic Emission Standard (Industrial)		
Environmental	**BS EN 60068-2-1** Cold Temperature -30°C		
	BS EN 60068-2-2 Hot Temperature +70°C		
	BS2011-2-1 Humidity 93% RH@40°C for 48 Hours		
	BS EN 60068-2-6 Vibration 10 sweeps at 1 octave/minute in each of 3 major axes 5Hz to 8Hz @ +/-7.5mm constant displacement 8Hz to 500Hz @ 2gn constant acceleration		
	BS EN 60068-2-27 Shock 3 Half sine shocks in each of 3 major axes 15gn amplitude, 11mS duration		
	BS EN 60529 Degrees of protection provided by enclosures: **IP55** (Front of module when module is installed into the control panel with the optional sealing gasket). **IP42** (front of module when module is installed into the control panel WITHOUT being sealed to the panel)		
	NEMA Rating (Approximate) **12** (Front of module when module is installed into the control panel with the optional sealing gasket). **2** (front of module when module is installed into the control panel WITHOUT being sealed to the panel)		
Product Certification	CE European CE approved.	C UL US UL approved C-UL / CSA approved.	PG Russia and other CIS countries approved
	RoHS **BS EN 2002/95/EC** Restriction of Hazardous Substances (RoHS)	**BS EN 2002/96/EC** Waste Electrical and Electronic Equipment (WEEE)	
Relevant Company Certification	UKAS UNITED KINGDOM ACCREDITATION SERVICE **BS EN ISO 9001:2000** Applicable to Design, marketing, assembly, service and repair of electronic control modules		

In line with our policy of continual development, Deep Sea Electronics, reserve the right to change specification without notice.

11 COMMISSIONING

11.1.1 PRE-COMMISSIONING

Before the system is started, it is recommended that the following checks are made:-

7.1. The unit is adequately cooled and all the wiring to the module is of a standard and rating compatible with the system.

7.2. The unit **DC** supply is fused and connected to the battery and that it is of the correct polarity.

7.3. The Emergency Stop input is wired to an external normally closed switch connected to **DC** positive.

NOTE:- If Emergency Stop feature is not required link this input to the DC Positive. The module will not operate unless either the Emergency Stop is fitted correctly OR Pin 3 is connected to DC positive (positive)

7.4. To check the start cycle operation, take appropriate measures to prevent the engine from starting (disable the operation of the fuel solenoid). After a visual inspection to ensure it is safe to proceed, connect the battery supply. Select "**MANUAL"**, the unit start sequence will commence.

7.5. The starter will engage and operate for the pre-set crank period. After the starter motor has attempted to start the engine for the pre-set number of attempts the LCD will display its icon indicating; '*Failed to start*' . Select the **STOP/RESET** position to reset the unit.

7.6. Restore the engine to operational status (reconnect the fuel solenoid), again select **"MANUAL"**, this time the engine should start and the starter motor should disengage automatically. If not then check the engine is fully operational (fuel available, etc.) and that the fuel solenoid is operating. The engine should now run up to operating speed. If not, and an alarm is present, check the alarm condition for validity, then check input wiring. The engine should continue to run for an indefinite period. It will be possible at this time to view the engine and alternator parameters - refer to the 'Description of Controls' section of this manual.

7.7. Select **"AUTO"** on the front panel, the engine will run for the pre-set cooling down period, then stop. The generator should stay in the standby mode. If not check that there is not a signal present on the **Remote start** input.

7.8. Initiate an automatic start by supplying the remote start signal. The start sequence will commence and the engine will run up to operational speed. Once the generator is available a load transfer will take place, the Generator will accept the load. If not, check the wiring to the Generator Contactor Coil *(if used)*. Check the Warming timer has timed out.

7.9. Remove the remote start signal, the return sequence will start. After the pre-set time period, the load will be removed from the generator. The generator will then run for the pre-set cooling down period, then shutdown into it's standby mode.

7.10. Set the modules internal clock/calendar to ensure correct operation of the scheduler and event logging functions. For details of this procedure see section entitled *Front Panel Configuration – Editing the date/time.*

7.11. If despite repeated checking of the connections between the **5210** and the customer's system, satisfactory operation cannot be achieved, then the customer is requested to contact the factory for further advice on:-

INTERNATIONAL TEL: +44 (0) 1723 890099
INTERNATIONAL FAX: +44 (0) 1723 893303
E-mail: Support@Deepseaplc.com
Website : www.deepseaplc.com

12 FAULT FINDING

SYMPTOM	POSSIBLE REMEDY
Unit is inoperative	Check the battery and wiring to the unit. Check the DC supply. Check the DC fuse.
Unit shuts down	Check DC supply voltage is not above 35 Volts or below 9 Volts Check the operating temperature is not above 70 °C. Check the DC fuse.
Unit locks out on Emergency Stop	If an Emergency Stop Switch is not fitted, ensure that a positive is connected to the Emergency Stop input. Check emergency stop switch is functioning correctly. Check Wiring is not open circuit.
Intermittent Magnetic Pick-up sensor fault	Ensure that Magnetic pick-up screen is only connected at one end, if connected at both ends, this enables the screen to act as an aerial and will pick up random voltages.
Low oil Pressure fault operates after engine has fired	Check engine oil pressure. Check oil pressure switch/sender and wiring. Check configured polarity (if applicable) is correct (i.e. Normally Open or Normally Closed) or that sender is compatible with the 5210 Module and is correctly configured.
High engine temperature fault operates after engine has fired.	Check engine temperature. Check switch/sender and wiring. Check configured polarity (if applicable) is correct (i.e. Normally Open or Normally Closed) or that sender is compatible with the 5210 Module.
Shutdown fault operates	Check relevant switch and wiring of fault indicated on LCD display. Check configuration of input.
Warning fault operates	Check relevant switch and wiring of fault indicated on LCD display. Check configuration of input.
Fail to Start is activated after pre-set number of attempts to start	Check wiring of fuel solenoid. Check fuel. Check battery supply. Check battery supply is present on the Fuel output of the module. Check the speed sensing signal is present on the 5210 inputs. Refer to engine manual.
Continuous starting of generator when in **AUTO**	Check that there is no signal present on the “Remote Start” input. Check configured polarity is correct.
Generator fails to start on receipt of Remote Start signal.	Check Start Delay timer has timed out. If remote start fault, check signal is on “Remote Start” input. Confirm input is configured to be used as “Remote Start”.
Pre-heat inoperative	Check wiring to engine heater plugs. Check battery supply. Check battery supply is present on the Pre-heat output of module. Check pre-heat has been selected in your configuration.
Starter motor inoperative	Check wiring to starter solenoid. Check battery supply. Check battery supply is present on the Starter output of module. Ensure that the Emergency Stop input is at positive.
Engine runs but generator will not take load	Check Warm up timer has timed out. Ensure generator load inhibit signal is not present on the module inputs.
Incorrect reading on Engine gauges	Check engine is operating correctly. Check sender and wiring paying particular attention to the wiring to terminal 47 (refer to appendix). Check that sender is compatible with the 5210 Module and is correctly configured.

NOTE: - The above fault finding is provided as a guide check-list only. As it is possible for the module to be configured to provide a wide range of different features, always refer to the source of your module configuration if in doubt.

13 TYPICAL WIRING DIAGRAM

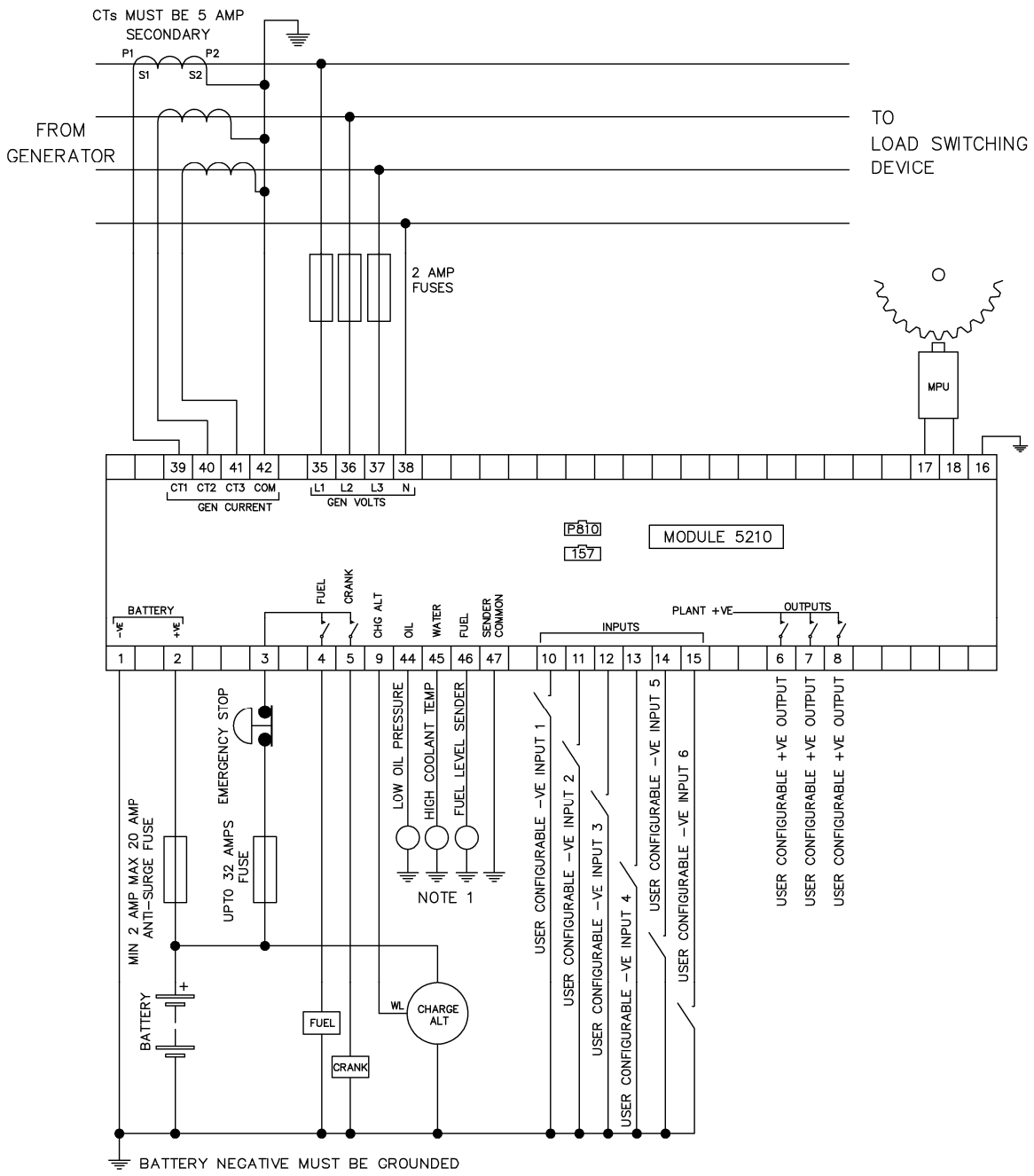

14 FACTORY DEFAULT CONFIGURATION

In the tables below, the icon 🛠 indicates an item that can be adjusted from the module's front panel editor. Absence of the 🛠 icon beside an item means that adjustment of this parameter is only possible using the 5200 series configuration software in conjunction with the P810 interface.
For further details on adjustment from the front panel editor, see the section entitled "Front panel configuration" elsewhere within this manual.

Module settings	Value
Base module	5210 remote start module

Miscellaneous settings	Value
Alternator fitted	Yes
Poles	4
Magnetic pickup fitted	No
AC System	3 phase, 4 wire
Enable fast loading feature	No
Number of start attempts	3

Input settings - Analogue		Value	
Low oil pressure input type		VDO 10 bar	
High coolant temp input type		VDO 120 degrees C	
		Trip	Return
Low oil pressure pre-alarm	🛠	1.17 Bar 17.0 PSI	1.24 Bar 18.0 PSI
Low oil pressure shutdown	🛠	1.03 Bar 14.9 PSI	N/A
High coolant temp pre-alarm	🛠	115°C 239°F	110°C 230°F
High coolant temp shutdown	🛠	120°C 248°F	N/A
Fuel level input type		VDO Ohm Range	
Fuel pump control		No	
Low fuel level	🛠	10%	

Input settings - Digital	Value
1 Remote start	Close to activate
2 User configured	Close to activate, Indication Always active
3 User configured	Close to activate, Warning Active from safety on
4 User configured	Close to activate, Shutdown Always active
5 User configured	Close to activate, Shutdown Active from safety on
6 User configured	Close to activate, Electrical trip Always active

LCD indicator settings	Value
1 Lit	Remote start present
2 Lit	Digital input 2 active
3 Lit	System in auto mode
4 Lit	Common alarm

Output settings – Relay	Value
1 Energise	Preheat (during pre-heat timer)
2 Energise	Common alarm
3 Energise	Close generator

Output settings – Expansion A	Value
1 Energise	Output not used
2 Energise	Output not used
3 Energise	Output not used
4 Energise	Output not used
5 Energise	Output not used
6 Energise	Output not used
7 Energise	Output not used
8 Energise	Output not used

Timer settings		Value
Start delay	🛠	5s
Pre-heat	🛠	0s
Sensor fail delay		2.0s
Cranking time	🛠	10s
Crank rest time	🛠	10s
Smoke limit		0s
Smoke limit off		0s
Safety on delay	🛠	10s
Overspeed overshoot	🛠	0s
Warming up time	🛠	0s
Transfer time		0.7s
Breaker close pulse		0.0s
Breaker trip pulse		0.0s
Return delay	🛠	30s
Cooling time	🛠	30s
ETS solenoid hold	🛠	0s
Fail to stop delay		30s
Generator transient delay		1s
Battery low volts delay		1m
Battery high volts delay		1m
LCD page timer		5m

Generator settings – Voltage/frequency		Trip	Return
Under volts trip	🛠	184V AC	N/A
Under volts pre-alarm	🛠	196V AC	207V AC
Over volts pre-alarm	🛠	265V AC	253V AC
Over volts trip	🛠	276V AC	N/A
Under frequency trip	🛠	40.0 Hz	N/A
Under frequency pre-alarm	🛠	42.0 Hz	45.0 Hz
Over frequency pre-alarm	🛠	55.0 Hz	52.0 Hz
Over frequency trip	🛠	57.0 Hz	N/A

Generator settings – Current/power		Value
Generator CT primary		500 A
Generator full load rating		500 A
Delayed overcurrent	🛠	100% (500 A)
Trip Curve		36

Engine settings – Crank disconnect	Value
Crank disconnect on generator frequency	21.0 Hz
Crank disconnect oil pressure	<Disabled>
Check oil pressure prior to starting	Yes

Engine settings – speed		Value
Underspeed trip	🛠	1250 RPM
Underspeed prealarm	🛠	1350 RPM
Overspeed prealarm	🛠	1650 RPM
Overspeed trip	🛠	1750 RPM
Overspeed overshoot		0%

Plant battery settings		Trip	Return
Under volts warning	🛠	8.0 V DC	9.0 V DC
Over volts warning	🛠	33.0 V DC	32.0 V DC
Charge alternator warning	🛠	8.0 V DC	N/A

Exercise scheduler settings	Value
Enable exercise scheduler	No

15 ICONS AND LCD IDENTIFICATION

15.1 PUSH BUTTONS

Display	Description	Display	Description	Display	Description
	Stop/Reset	AUTO	*Auto mode*		*Manual mode*
	Configure / log	I	*Start (when in manual mode)*		*Scroll*

15.2 STATUS / MEASUREMENT UNITS

Display	Description	Display	Description	Display	Description
L1	*Phase*	**L2**	*Phase*	**L3**	*Phase*
L1- N	*Phase - Neutral*	**L2- N**	*Phase - Neutral*	**L3- N**	*Phase -Neutral*
L1- L2	*Phase - Phase*	**L2- L3**	*Phase - Phase*	**L3- L1**	*Phase - Phase*
BAR	*Pressure*	**KPa**	*KPa Oil Pressure Units*	**PSI**	*Pressure*
V	*Voltage*	**°F**	*Temperature*	**Hz**	*Frequency*
A	*Amperes*	**°C**	*Temperature*	**RPM**	*Speed*
kW	*KiloWatts*	**kVA**	*Apparent power*	**CosØ**	*KW divided by kVA*
	Hours Run		*AC*		*Generator*
	Timer in progress		*DC*		*Factory (load)*
	Configuration mode active		*Fuel level*		*Event log*
	Panel locked by configurable input				

15.3 ALARM INDICATIONS

Display	Description	Display	Description	Display	Description
	Warning Alarm		*Shutdown Alarm*		*Electrical Trip*
	Fuel		*Low Oil Pressure*	A	*High Current Warning*
	Charge Fail		*High Coolant Temperature*	V	*Over Voltage (AC)*
	Emergency Stop		*Fail to start (Over-crank)*	V	*Under Voltage (AC)*
V	Over Voltage (DC)		*Over-speed*	Hz	*Over frequency*
V	Under Voltage (DC)		*Under-speed*	Hz	*Under frequency*
	Auxiliary Indication		*Auxiliary Alarm (Warning or Shutdown)*		

16 APPENDIX

16.1 ALTERNATIVE WIRING TOPOLOGIES

The 5200 series controllers can support many different wiring topologies (AC systems) to suit the many systems in use world-wide. The 'Typical connection diagram' details how to connect the module when used in a 3 phase, 4 wire system (3 phase star connected alternators). Changes to this typical wiring diagram for other AC systems are detailed below.

⚠NOTE:- The factory default configuration for the 5210 module is for use with the 3 phase, 4 wire AC system. If another system is to be used, the controller must be reconfigured using the 5200 series configuration software.

16.1.1 3 PHASE, 3 WIRE

The alternator is 3 phase delta connected. Phases are separated by 120°

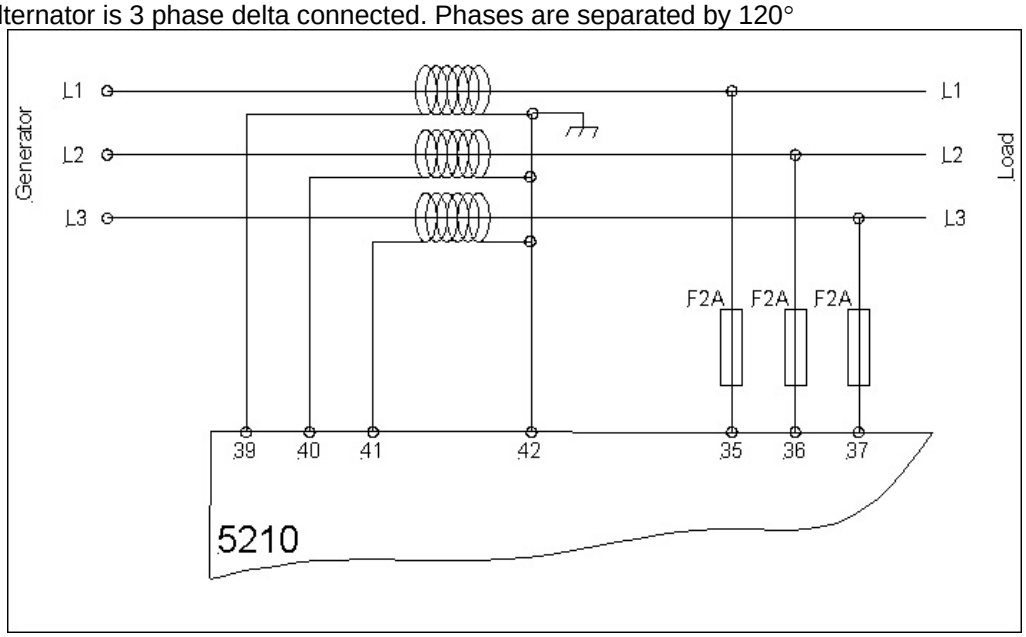

16.1.2 1 PHASE, 2 WIRE

Single phase alternator with neutral conductor.

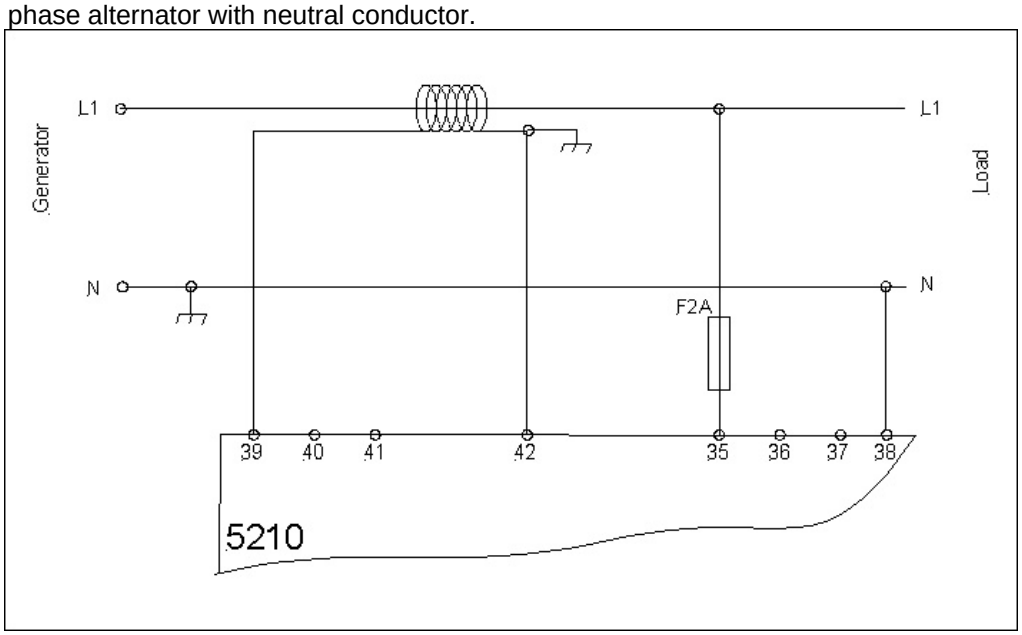

16.1.3 2 PHASE, 3 WIRE (2 PHASE CENTRE TAP NEUTRAL)

The alternator is 2 phase star connected. The live phases are separated by 180°

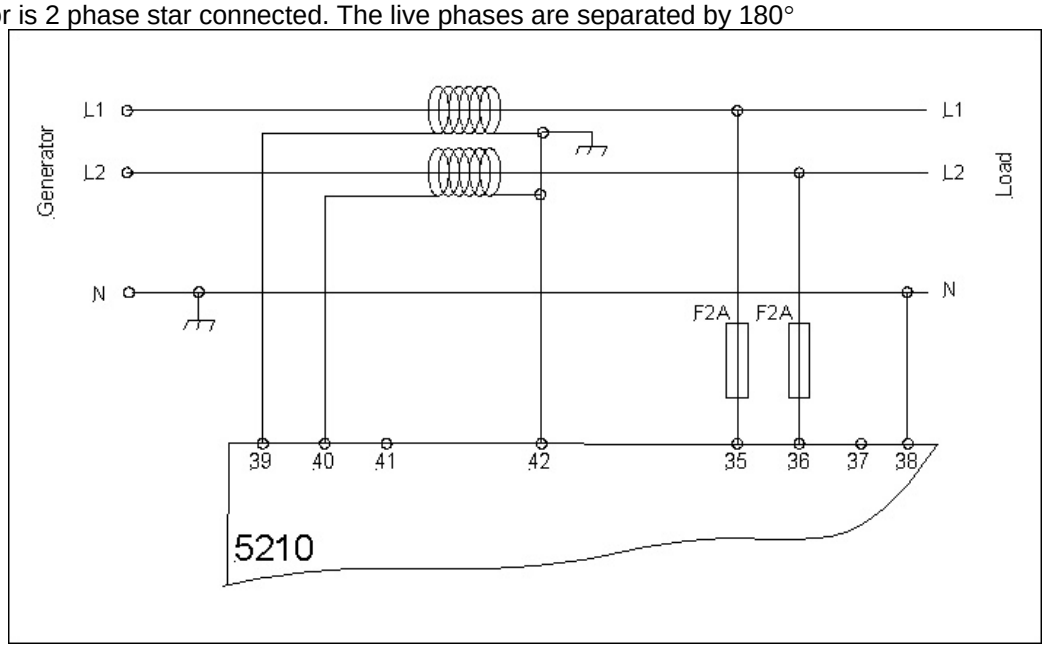

16.2 5210 IDMT TRIPPING CURVES (TYPICAL)

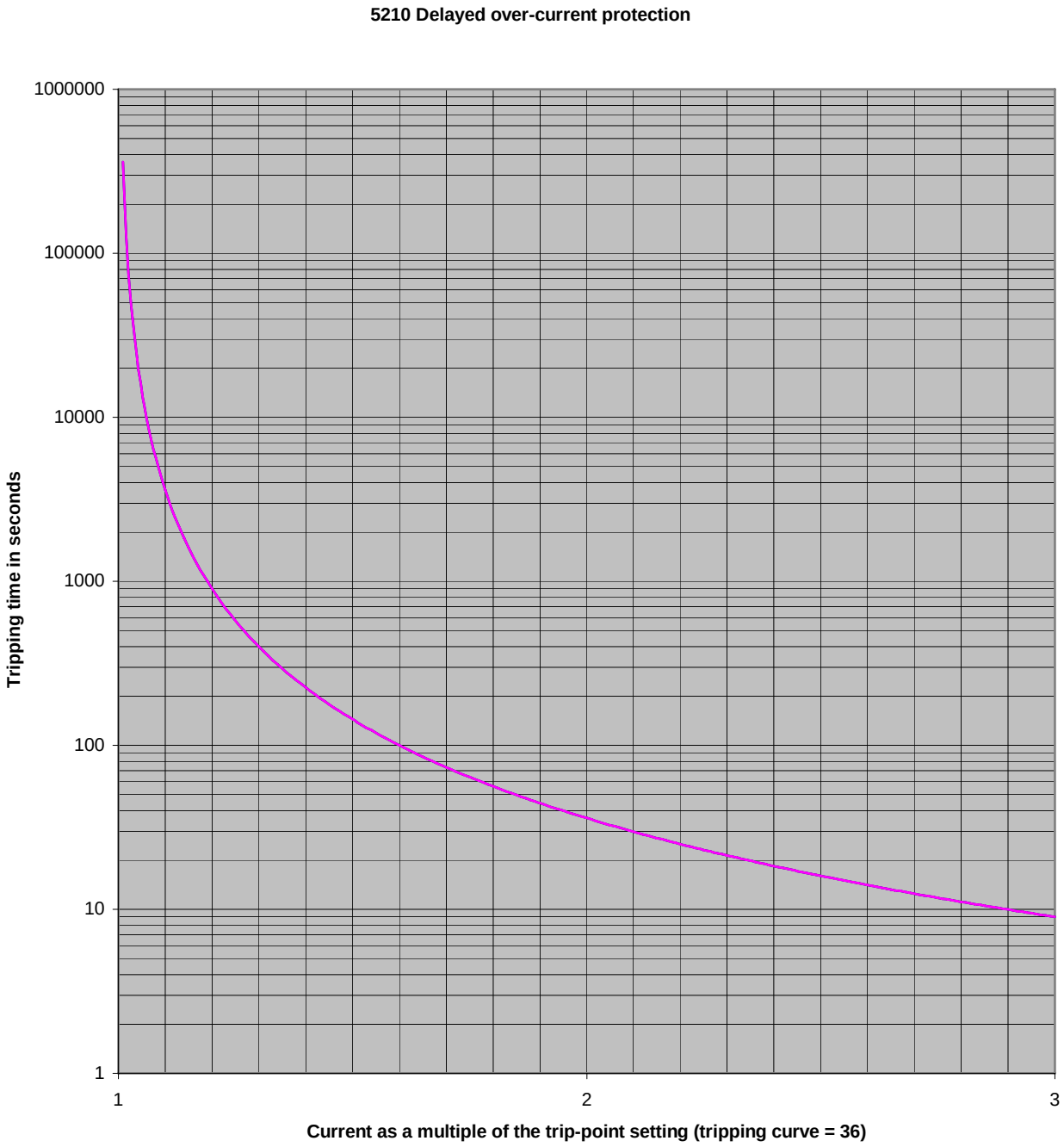

16.3 SENDER WIRING RECOMMENDATIONS

16.3.1 EARTH RETURN SENDERS

Connection Name	Terminal Number
Oil pressure Sender	44
Coolant temperature sender	45
Fuel level sender	46
Sender common	47

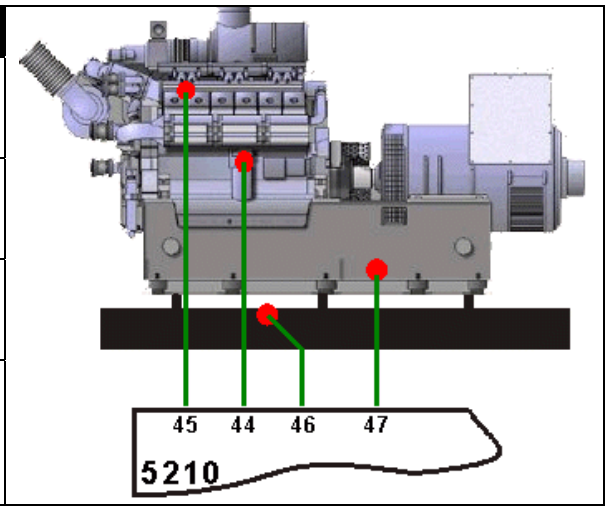

NOTE:- . It is important that terminal 47 (sender common) is soundly connected to an earth point on the ENGINE BLOCK, not within the control panel, and must be a sound electrical connection to the sender bodies.

NOTE:- . If you use PTFE insulating tape on the sender thread when using earth return senders, ensure you do not insulate the entire thread as this will prevent the sender body from being earthed via the engine block.

16.3.2 INSULATED RETURN SENDERS

Connection Name	Terminal Number
Oil pressure Sender	44
Coolant temperature sender	45
Fuel level sender	46
Sender common	47

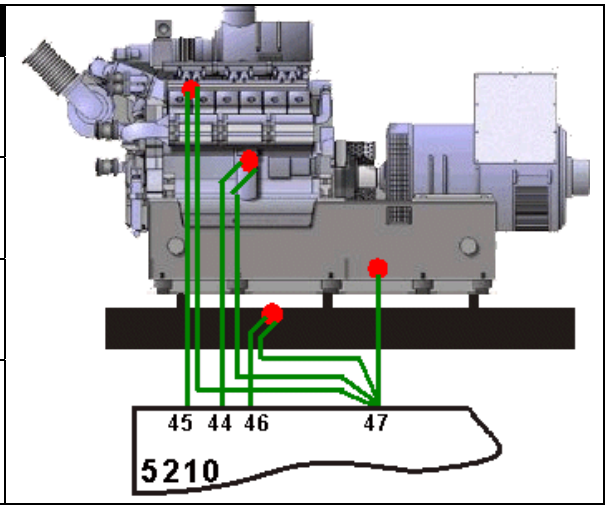

NOTE:- . It is important that terminal 47 (sender common) is soundly connected to an earth point on the ENGINE BLOCK, not within the control panel .

16.3.3 FUEL LEVEL SENDERS

The resistive fuel level senders supported by the 5200 series controllers are devices that translate fuel level into resistance. A change in fuel level translates directly to a change in the resistance of the sender. In the case of a parallel sided fuel tank, an accurate measure of the fuel level can easily be made, however as shown in the example below, this is not the case with non-parallel sided fuel tanks. Therefore it is recommended that only parallel sided fuel tanks are used to ensure correct fuel level detection.

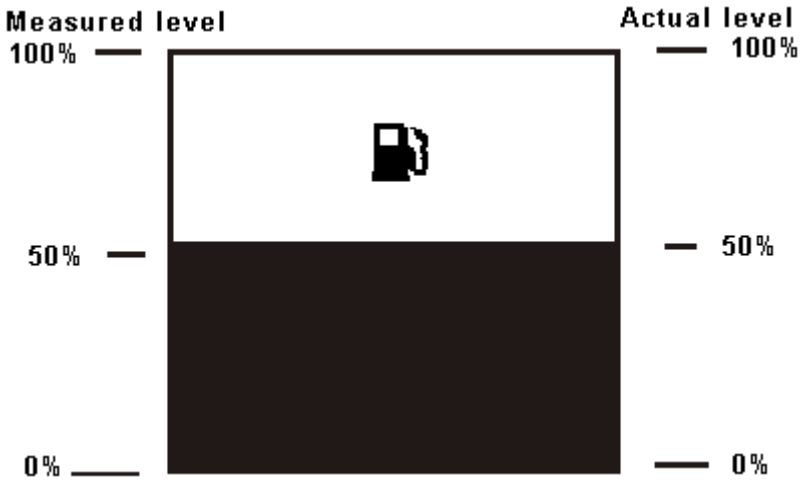	The fuel sender measures the distance between the top of the tank and the fuel level. Typically, they use a ball float. In this example, the distance between the top of the tank and the level of the fuel is 50% of the height of the tank. The fuel level sender will report the tank correctly as being 50% full. For a parallel-sided tank like this one, 50% distance between the top of the tank and the level of the fuel will occur when the tank is 50% full of fuel.
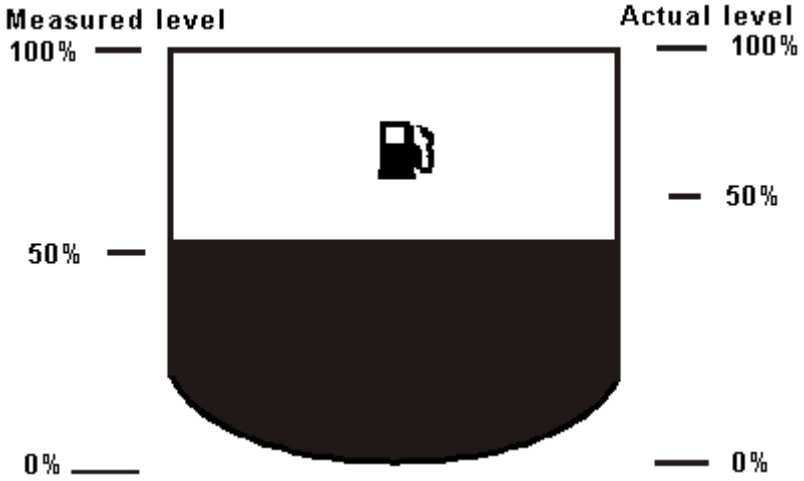	In this example, the distance between the top of the tank and the level of the fuel is again 50% of the height of the tank, the fuel level sender will report the tank as being 50% full. However, as the bottom of the tank is curved, the actual amount of fuel in the tank is only about 40%. The fuel sender is incorrectly reporting the amount of remaining fuel.

16.4 5200 SERIES CONFIGURATION SOFTWARE AND P810 INTERFACE MODULE

The **5210** module can be configured using PC with Interface Module **810** and **52xx series PC configuration software.**
The 5200 series configuration software kit comprises the following:-

- **810** Interface Module
- 25 to 9 way adapter
- RJ45 (8 Pin) Connecting Lead
- DSE SoftwareCD with configuration software

16.5 OUTPUT EXPANSION

There are several methods of output expansion available for the 5210 module:-

16.5.1 RELAY OUTPUT EXPANSION (157)

An expansion module is available, which connects to the configuration socket, and enables the 5210 to use eight additional relays, providing Volt-free contacts for customer connection.

Refer to technical data sheet on the 157 relay module for further details.

16.5.2 LED OUTPUT EXPANSION (548)

An expansion module is available, which connects to the configuration socket, and enables the 5210 to use eight additional LED's, providing remote LED indication up to 50 metres away.

Refer to technical data sheet on the 548 LED module for further details.
It is possible to use a mix of 157 and 548 modules to give both relay and LED expansion of the same 8 items if required (Please refer to our Technical Support department for details.).

16.6 INPUT EXPANSION

It is possible to increase the number of monitored inputs available by utilising a DSE 540/541 Protection Expansion/Annunciator. Please refer to our Technical department for details.

16.7 STANDBY GENERATING SET?

The 5210 needs to be given a remote start signal to initiate an engine start. This can be supplied by a Mains/Utility monitoring module to make the generating set start up automatically should the mains/utility supply fail. The 5210 module may be used in conjunction with DSE Automatic transfer switch controllers such as the model 500 (pictured) , 705 or 530. These not only monitor the mains and issue a start command to the 5210; they also provide control of the contactors or other changeover devices. Please refer to our Technical Support department for details.

16.8 FULLY INTEGRATED AUTO MAINS FAILURE

The 5210 module can easily be upgraded with a 5220 controller. It has exactly the same mounting details and uses exactly the same rear connectors. Upgrading takes seconds and instantly provides integral mains (utility) monitoring and changeover functions in the same controller. Please refer to our website for details (http://www.deepseaplc.com)

16.9 ENCLOSURE CLASSIFICATIONS

IP CLASSIFICATIONS

BS EN 60529 Degrees of protection provided by enclosures

First Digit Protection against contact and ingress of solid objects	Second digit Protection against ingress of water
0 No protection	0 No protection
1 Protected against ingress solid objects with a diameter of more than 50 mm. No protection against deliberate access, e.g. with a hand, but large surfaces of the body are prevented from approach.	1 Protection against dripping water falling vertically. No harmful effect must be produced (vertically falling drops).
2 Protected against penetration by solid objects with a diameter of more than 12 mm. Fingers or similar objects prevented from approach.	2 Protection against dripping water falling vertically. There must be no harmful effect when the equipment (enclosure) is tilted at an angle up to 15° from its normal position (drops falling at an angle).
3 Protected against ingress of solid objects with a diameter of more than 2.5 mm. Tools, wires etc. with a thickness of more than 2.5 mm are prevented from approach.	3 Protection against water falling at any angle up to 60° from the vertical. There must be no harmful effect (spray water).
4 Protected against ingress of solid objects with a diameter of more than 1 mm. Tools, wires etc. with a thickness of more than 1 mm are prevented from approach.	4 Protection against water splashed against the equipment (enclosure) from any direction. There must be no harmful effect (splashing water).
5 Protected against harmful dust deposits. Ingress of dust is not totally prevented but the dust must not enter in sufficient quantity to interface with satisfactory operation of the equipment. Complete protection against contact.	5 Protection against water projected from a nozzle against the equipment (enclosure) from any direction. There must be no harmful effect (water jet).
6 Protection against ingress of dust (dust tight). Complete protection against contact.	6 Protection against heavy seas or powerful water jets. Water must not enter the equipment (enclosure) in harmful quantities (splashing over).

NEMA CLASSIFICATIONS

NOTE: - There is no direct equivalence between IP / NEMA ratings. IP figures shown are approximate only.

1 **IP30**	Provides a degree of protection against contact with the enclosure equipment and against a limited amount of falling dirt.
2 **IP31**	Provides a degree of protection against limited amounts of falling water and dirt.
3 **IP64**	Provides a degree of protection against windblown dust, rain and sleet; undamaged by the formation of ice on the enclosure.
3R **IP32**	Provides a degree of protection against rain and sleet:; undamaged by the formation of ice on the enclosure.
4 (X) **IP66**	Provides a degree of protection against splashing water, windblown dust and rain, hose directed water; undamaged by the formation of ice on the enclosure. (Resist corrosion).
12/12K **IP65**	Provides a degree of protection against dust, falling dirt and dripping non corrosive liquids.
13 **IP65**	Provides a degree of protection against dust and spraying of water, oil and non corrosive coolants.

<<< THIS PAGE INTENTIONALLY BLANK >>>